ADDENDUM NO.: 1
IFB or RFP NO.: 721
Description: Furnish, deliver and install Audio/Video Equipment
Project: Westchester Community College – Yonkers Extension Center
Bid Opening Date: April 14, 2022

Specifics of the Addendum: Architect's electrical drawings are included for reference in lieu of a floor plan depicting power and low voltage and a revision is made to the delivery address.

NOTICE AND INFORMATION FOR BIDDERS – Attachment C: Scope of Work and Site logistics is amended as follows:

Site logistic Information

Delivery location: Westchester Community College, 843 Kimball Avenue, New York, New York 10704

All other terms and conditions of the original Invitation for Bids shall remain the same.

WESTCHESTER COMMUNITY COLLEGE

CROSS COUNTY SHOPPING CENTER

INTERIOR BUILD-OUT

ISSUED FOR CONSTRUCTION
03.16.22

MEP ENGINEER:

OLA CONSULTING ENGINEERS, PC
50 BROADWAY, 2ND FLOOR
HAWTHORNE, NY 10532
PH: 914.747.2800

ARCHITECT:

OTJ ARCHITECTS
1407 BROADWAY, SUITE 910
NEW YORK, NY 10018
P: 646.846.3930

OTJ ARCHITECTS

LOCATION PLAN

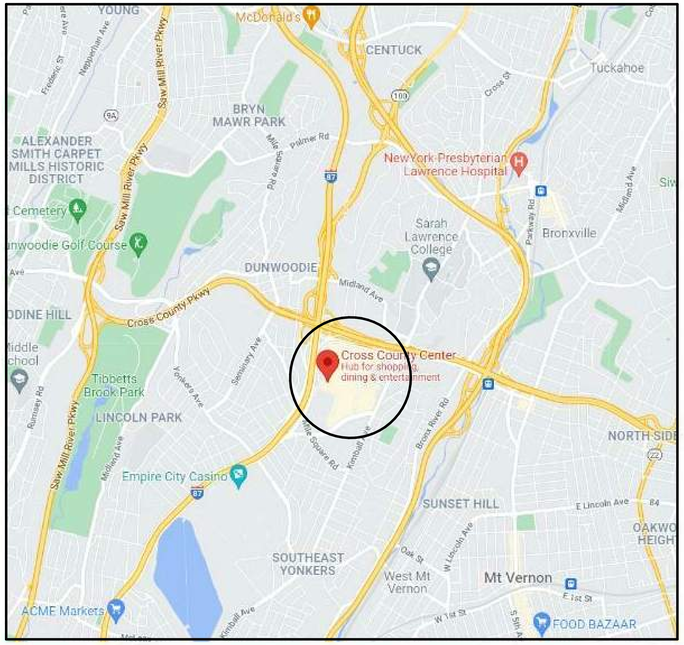

SITE PLAN - CROSS COUNTY MALL

BUILDING 11

ALTERNATE LIST

GC TO PROVIDE ADD ALTERNATE PRICING FOR THE TENANT WORK LISTED BELOW, TO BE PREFORMED BY THE LANDLORD AT THE TENANTS EXPENSE.

ADD ALTERNATES

KEY	NOTE

DRAWING INDEX

SHEET NUMBER	SHEET NAME	ISSUED FOR CONSTRUCTION
GENERAL NOTES		
G-000	COVER	X
G-001	DRAWING INDEX, NOTES, LOCATION PLANS & BUILDING CODE INFORMATION	X
G-002	EGRESS AND OCCUPANCY PLANS AND CALCULATIONS	X
G-003	GENERAL PROJECT REQUIREMENTS & CONSTRUCTION NOTES	X
G-004	ABBREVATIONS, SYMBOLS, AND CLEARANCE DIAGRAMS	X
G-005	PLANNING BOARD RESOLUTION	X
ARCHITECTURAL		
A-200	CONSTRUCTION PLAN - OVERALL	X
A-201	CONSTRUCTION PLAN - SIDE A	X
A-202	CONSTRUCTION PLAN - SIDE B	X
A-300	POWER & SIGNAL PLAN - OVERALL	X
A-301	POWER & SIGNAL PLAN - SIDE A	X
A-302	POWER & SIGNAL PLAN - SIDE B	X
A-400	REFLECTED CEILING PLAN - OVERALL	X
A-401	REFLECTED CEILING PLAN - SIDE A	X
A-402	REFLECTED CEILING PLAN - SIDE B	X
A-500	FINISH PLAN - OVERALL	X
A-501	FINISH PLAN - SIDE A	X
A-502	FINISH PLAN - SIDE B	X
A-503	FINISH SCHEDULE	X
A-600	DOORS SCHEUDLE, FRAME TYPES AND DETAILS	X
A-601	WALL TYPES, OPERABLE WALL & CEILING DETAILS	X
A-700	ELEVATIONS	X
A-701	ELEVATIONS	
A-800	MILLWORK ENLARGED PLANS & DETAILS	X
STRUCTURAL		
S-001	GENERAL NOTES	X
S-100	PARTIAL PLANS & DETAIL	X
MECHANICAL		
M-001	MECHANICAL SYMBOLS, ABBREVIATIONS AND GENERAL NOTES	X
M-002	MECHANICAL SPECIFICATIONS	X
M-003	MECHANICAL SPECIFICATIONS	X
M-201	MECHANICAL THIRD FLOOR NEW WORK	X
M-202	MECHANICAL THIRD FLOOR NEW WORK	X
M-203	MECHANICAL ROOF NEW WORK	X
M-601	MECHANICAL SCHEDULES AND EQUIPMENT NOTES	X
M-602	MECHANICAL SCHEDULES	X
M-701	MECHANICAL DETAILS	X
M-702	MECHANICAL DETAILS	X
PLUMBING		
P-001	PLUMBING SYMBOLS, ABBREVIATIONS, AND GENERAL NOTES	X
P-002	PLUMBING SPECIFICATIONS	X
P-003	PLUMBING SPECIFICATIONS	X
P-200	PLUMBING SECOND FLOOR NEW WORK	X
P-201	PLUMBING THRID FLOOR NEW WORK	X
P-202	PLUMBING THRD FLOOR NEW WORK	X
P-203	PLUMBING ROOF WORK	X
P-501	PLUMBING RISERS	X
P-701	PLUMBING DETAILS	X
SPRINKLER		
SP-001	SPRINKLER SYMBOLS, ABBREVIATIONS AND GENREAL NOTES	X
SP-002	SPRINKLER SPECIFICATIONS	X
SP-101	SPRINKLER THRID FLOOR DEMOLITION	X
SP-201	SPRINKLER THIRD FLOOR NEW WORK	X
SP-202	SPRINKLER THIRD FLOOR NEW WORK	X
SP-701	SPRINKLER DETAILS	X
ELECTRICAL		
E-001	ELECTRICAL SYMBOLS, ABBREVIATIONS AND GENERAL NOTES	X
E-002	ELECTRICAL SPECIFICATIONS	X
E-003	ELECTRICAL SPECIFICATIONS	X
E-201	ELECTRICAL THIRD FLOOR LIGHTING PLAN - SIDE A	X
E-202	ELECTRICAL THIRD FLOOR LIGHTING PLAN - SIDE B	X
E-300	IT SCHEDULE	X
E-301	ELECTRICAL THIRD FLOOR POWER PLAN - SIDE A	X
E-302	ELECTRICAL THIRD FLOOR POWER PLAN - SIDE B	X
E-313	ELECTRICAL POWER ROOF PLAN	X
E-401	ELECTRICAL SECOND AND THIRD FLOOR ROUTING PART PLAN	X
E-501	ELECTRICAL ONE-LINE DIAGRAM	X
E-601	ELECTRICAL SCHEDULE AND NOTES	X
E-602	ELECTRICAL SCHEDULES	X
E-603	ELECTRICAL SCHEDULES	X
E-701	ELECTRICAL DETAILS	X
E-702	ELECTRICAL DETAILS	X
FIRE PROTECTION		
FA-100	FIRE ALARM RISER DIAGRAM AND DETAILS	X
FA-101	FIRE ALARM THIRD FLOOR PLAN - SIDE A	X
FA-102	FIRE ALARM THIRD FLOOR PLAN - SIDE B	X
FA-103	FIRE ALARM ROOF PLAN	X

FOR MEP APPLICATIONS REFER TO :

MECHANICAL: - B0029197
PLUMBING - P25058
ELECTRICAL - E202101407

BUILDING INFORMATION, CODE, & ANALYSIS

BUILDING INFORMATION:

PROJECT NAME:	WESTCHESTER COMMUNITY COLLEGE
PROJECT LOCATION:	CROSS COUNTY SHOPPING CENTER 8000 MALL WALK DRIVE YONKERS WESTCHESTER COUNTY, NEW YORK
ZONE:	BR (RESTRICTED BUSINESS, RESIDENCE)
SECTION:	5
BLOCK:	5170
LOT:	40, 110
BUILDING NUMBER:	11
NUMBER OF FLOORS:	4
BUILDING FLOOR AREA TOTAL:	213,349 SQ FT
THIRD FLOOR AREA TOTAL:	70,291 SQ FT
PROJECT FLOOR AREA:	34,160 SQ FT
CONSTRUCTION CLASSIFICATION:	1B
OCCUPANCY CLASS:	M - *(B WITH SPECIAL PERMIT)*

SCOPE OF WORK: NEW INTERIOR WALLS, CEILINGS, DOORS, PLUMBING FIXTURES AND FINISHES.

APPLICABLE CODES:

BUILDING CODE:	2020 UNIFORM FIRE PREVENTION AND BUILDING CODE (UNIFORM CODE) & THE ENRGY CONSERVATION CONSTRUCTION CODE OF NEW YORK STATE
ADA/ ACCESSIBILITY:	ANSI A117.1 2017 - ACCESSIBLE & USABLE BUILDINGS & FACILITIES, AND CHAPTER 11 AND APPENDIX E OF THE BUILDING CODE OF NEW YORK STATE.

FIRE RESISTANCE RATING REQUIREMENTS:

STRUCTURAL FRAME:	2
BEARING WALLS - INT & EXT:	2
NON-BEARING WALLS:	0
FLOOR CONSTRUCTION:	1
ROOF CONSTRUCTION:	1
SHAFTS:	2
SPRINKLER:	YES
HEIGHT OF BUILDING:	51'
FLOOR LOCATION:	3RD FLOOR

ACCESSIBILITY STATEMENT

THESE DRAWINGS AND SPECIFICATIONS HAVE BEEN PREPARED TO THE BEST OF MY KNOWLEGE AND ARE BELIEVED TO MEET THE REQUIREMENTS OF ICC / ANSI 117.1 ACCESSIBLE AND USEABLE BUILDINGS AND FACILITIES, AND CHAPTER 11 AND APPENDIX E OF THE BUILDING CODE OF NEW YORK STATE.

NY CONTROLLED INSPECTIONS

THE OWNER SHALL SECURE AND PAY FOR THIRD PARTY INDEPENDENT NEW YORK STATE CONTROLLED INSPECTIONS. ALL INSTALLATIONS REQUIRING CONTROLLED INSPECTIONS SHALL BE APPROVED. THE CONTROLLED INSPECTIONS INCLUDE BUT ARE NOT LIMITED TO THE FOLLOWING:

- FIRESTOP, DRAFTSTOP AND FIREBLOCK SYSTEMS
- FIRE-RESISTANCE RATED CONSTRUCTION
- STRUCTURAL STEEL
- FINAL

PROTECTION NOTES

1. CONSTRUCTION WORK WILL BE CONFINED TO THE INTERIOR SPACE AND WILL NOT CREATE DUST, DIRT OR OTHER SUCH INCONVENIENCES TO OTHER BUILDING OCCUPANTS.
2. CONSTRUCTION WORK WILL NOT BLOCK HALLWAYS OR MEANS OF EGRESS FOR OCCUPANTS OF THE BUILDING.
3. CONSTRUCTION WORK WILL NOT INVOLVE INTERRUPTION OF HEATING, WATER OR ELECTRIC SERVICES TO OTHER OCCUPANTS OF THE BUILDING.
4. THERE WILL BE NO ONE OCCUPYING THE AREA TO BE RENOVATED DURING THE COURSE OF THE WORK.
5. THE BUILDING MANAGER IS TO BE ADVISED OF ANY INTERRUPTION IN HEATING, WATER OR ELECTRICAL SERVICE.
6. AT ALL TIMES IN THE COURSE OF CONSTRUCTION PROVISION SHALL BE MADE FOR ADEQUATE EGRESS AS REQUIRED BY CODE.
7. ALL FIRE SAFETY LAWS AND CONTROLS SHALL BE STRICTLY OBSERVED.
8. SPECIFICATION OF METHODS TO BE USED FOR CONTROL OF DUST, DISPOSAL OF CONSTRUCTION DEBRIS, PEST CONTROL AND MAINTENANCE OF SANITARY FACILITIES, AND LIMITATION OF NOISE TO ACCEPTABLE LEVELS SHALL BE OBSERVED.
9. NO STRUCTURAL WORK SHALL BE DONE THAT MAY ENDANGER THE OCCUPANTS.
10. WHERE HOURS OF THE DAY OR THE DAYS OF THE WEEK IN WHICH CONSTRUCTION WORK MAY BE UNDERTAKEN ARE LIMITED PURSUANT TO THE YONKERS NOISE CONTROL CODE OR LANDLORD REQUEST, SUCH LIMITATIONS SHALL BE OBSERVED.

OTJ ARCHITECTS

CLIENT

MARX REALTY
INVESTORS DEVELOPERS MANAGERS
EST. 1915
A MNP COMPANY

CONSULTANTS

MEP CONSULTANT:

OLA CONSULTING ENGINEERS, PC
50 BROADWAY, 2ND FLOOR
HAWTHORNE, NY 10532
PH: 914.747.2800

ISSUES

NUMBER	DESCRIPTION	DATE
5	ISSUED FOR CONSTRUCTION	03.16.22
4	ISSUED FOR PERMIT RESPONSE	01.19.21
3	ISSUED FOR BID	12.13.21
2	ISSUED FOR PERMIT	11.11.21
1	ISSUED FOR REVIEW - 50% DWG SET	09.24.21

PROJECT NAME & ADDRESS

WESTCHESTER COMMUNITY COLLEGE

CROSS COUNTY SHOPPING CENTER

SHEET NAME

DRAWING INDEX, NOTES, LOCATION PLANS & BUILDING CODE INFORMATION

SEAL / SIGNATURE

-

FILE INFORMATION

Project No:	9398.02
Drawn By:	JM
Checked By:	JM
Date:	09/24/21
Scale:	As indicated

G-001

SYMBOLS AND ABBREVIATIONS

SYMBOL	ABBREVIATION	DESCRIPTION
	-	CONDUIT AND WIRING
	-	CONDUIT & WIRING TO BE REMOVED UON
—UG—	-	BURIED CONDUIT
—OH—	-	OVERHEAD CONDUCTORS
	-	HOMERUN TO PANEL, ARROWS INDICATE # 1P
	-	MULTI-POLE HOMERUN
	-	ELECTRICAL EQUIPMENT AS INDICATED
	-	ELECTRICAL EQUIPMENT TO BE REMOVED UON
M	-	ELECTRIC METER
J	-	JUNCTION BOX
	-	FUSED DISCONNECT SWITCH
	-	UNFUSED DISCONNECT SWITCH
	-	COMBINATION MOTOR STARTER/FUSED DISC.
	-	MOTOR STARTER
	-	MOTOR
	-	BATTERY PACK EMERGENCY LIGHT FIXTURE
	-	EXIT LIGHT, FACES-SHADED, CHEVRON-ARROW
S_x	-	SINGLE POLE SWITCH (x - INDICATES FIXTURE BEING CONTROLLED)
S_x^3	-	THREE WAY SWITCH (x - INDICATES FIXTURE BEING CONTROLLED)
S_x^4	-	FOUR WAY SWITCH (x - INDICATES FIXTURE BEING CONTROLLED)
S_x^{DIM}	-	DIMMER SWITCH (x - INDICATES FIXTURE BEING CONTROLLED)
S_M	-	MOTOR RATED TOGGLE SWITCH
S_K	-	KEY OPERATED SINGLE POLE SWITCH
	-	WALL MOUNTED OCCUPANCY SENSOR
V	-	WALL MOUNTED VACANCY SENSOR
OC	-	CEILING MOUNTED OCCUPANCY SENSOR
OC V	-	CEILING MOUNTED VACANCY SENSOR
	-	DUPLEX RECEPTACLE
	-	DOUBLE DUPLEX RECEPTACLE
	-	SPECIAL RECEPTACLE
	-	TELEPHONE OUTLET
x	-	DATA OUTLET (x - INDICATES # OF JACKS, 1 JACK UON)
V	-	COMBINATION TELEPHONE/DATA OUTLET
SP	-	CEILING MOUNTED PUBLIC ADDRESS SPEAKER
HD	-	ELECTRIC HAND DRYER
EPO	EPO	EMERGENCY POWER OFF SWITCH
	CB	CIRCUIT BREAKER
	-	ENCLOSED CIRCUIT BREAKER
200AS 150AF	-	FUSED SWITCH
OR	GND	GROUND AS PER LOCAL CODE
	-	GROUND BAR
OR T	XFMR	TRANSFORMER
	CT	CURRENT TRANSFORMER
WM	WM	WATER MAIN
B	-	BOILER BREAK GLASS STATION
	CV	CONTROL VALVE
M	MD	MOTORIZED DAMPER
	SD OR CFSD	SMOKE DAMPER
UH	UH	UNIT HEATER
VAV	VAV	VARIABLE AIR VOLUME BOX
P	-	FURNITURE SYSTEM POWER FEED
C	-	FURNITURE SYSTEM COMMUNICATION FEED

SYMBOL	ABBREVIATION	DESCRIPTION
	A	AMPERE(S)
	AC	AIR CONDITIONER
	ACC	AIR CONDITIONER CONDENSER
	AFF	ABOVE FINISHED FLOOR
	AF	AMPERAGE OF FUSE
	AGL	ABOVE GRADE LEVEL
	AHU	AIR HANDLING UNIT
	AS	AMPERAGE OF SWITCH
	AWG	AMERICAN WIRE GAUGE
	BCW	BARE COPPER WIRE
	BLDG	BUILDING
	BMS	BUILDING MANAGEMENT SYSTEM
	C	CONDUIT
	CD	CANDELA
	CKT	CIRCUIT
	CLG	CEILING
	COL	COLUMN
	CU	COPPER
	CUH	CABINET UNIT HEATER
	DEM.	DEMOLISH AND REMOVE
	DISC	DISCONNECT
	DIM	DIMMER
	DWG	DRAWING
	ELEV	ELEVATOR
	EMT	ELECTRICAL METALLIC TUBING
	EM	EMERGENCY
	EX.	EXISTING TO REMAIN
	F	FLOOR
	FBO	FURNISHED BY OTHERS
	FC	FAN COIL UNIT
	GEN	GENERATOR
	GFI	GROUND FAULT INTERRUPTER
	HP	HORSEPOWER
	HVAC	HEATING VENTILATION AIR CONDITIONING
	IMC	INTERMEDIATE METAL CONDUIT
	KVA	KILO-VOLT-AMPERE
	KW	KILO-WATT
	MAX	MAXIMUM
	MCB	MAIN CIRCUIT BREAKER
	MIN	MINIMUM
	MLO	MAIN LUG ONLY
	NIC	NOT IN CONTRACT
	NTS	NOT TO SCALE
	PBO	PROVIDED BY OTHERS
	PNL	PANEL
	REL.	REMOVE AND RELOCATE
	RGS	RIGID GALVANIZED STEEL
	RTU	ROOF TOP UNIT
	SCH	SCHEDULE
	SPD	SURGE PROTECTION DEVICE
	SW	SWITCH(ES)
	TELCO	TELEPHONE COMPANY
	TYP	TYPICAL
	UON	UNLESS OTHERWISE NOTED
	UV	UNIT VENTILATOR
	VIF	VERIFY IN FIELD
	V	VOLT(S)
	VSD	VARIABLE SPEED DRIVE
	WH	WATER HEATER

SYMBOL	ABBREVIATION	DESCRIPTION
	WP	WEATHERPROOF

NOTES:
1.) ALL SYMBOLS AND ABBREVIATIONS MAY NOT BE APPLICABLE FOR THIS PROJECT.
2.) SEE LIGHTING FIXTURE SCHEDULE FOR LIGHT FIXTURE SYMBOLS.

GENERAL NOTES

1. ALL WORK SHOWN IS NEW UNLESS OTHERWISE NOTED (UON) EXISTING TO REMAIN (EX.).
2. THE DRAWINGS ARE TO BE CONSIDERED SCHEMATIC ONLY AND DO NOT NECESSARILY SHOW THE EXACT LOCATIONS AND DETAILS OF THE WORK TO BE INSTALLED.
3. ALL WORK INVOLVING THE ELECTRIC SERVICE SHALL BE COORDINATED AND APPROVED BY THE UTILITY COMPANY.
4. ALL CONDUCTORS SHALL BE COPPER UON "ON DRAWINGS".
5. ELECTRONIC FILES OF THE MECHANICAL, ELECTRICAL, PLUMBING AND FIRE PROTECTION DRAWINGS ARE AVAILABLE TO THE CONTRACTOR. THE ENGINEER MAY GRANT THE CONTRACTOR A LIMITED LICENSE TO MAKE A DERIVATIVE WORK OF THE DATABASE FOR THE PURPOSE OF SHOP DRAWINGS, SUBMITTALS AND AS-BUILT DRAWINGS. UPON REQUEST, THE ENGINEER SHALL PROVIDE A RELEASE FORM THAT MUST BE SIGNED AND RETURNED BY THE CONTRACTOR PRIOR TO RELEASE OF THE ELECTRONIC FILES.
6. CIRCUIT NUMBERS ARE FOR INFORMATION PURPOSES ONLY. ACTUAL CIRCUIT NUMBERS SHALL BE DETERMINED IN THE FIELD.
7. CORE DRILLING OR TRENCHING THROUGH AN EXISTING FLOOR SLAB, WHEN REQUIRED, SHALL BE COORDINATED WITH THE OWNER. FLOOR SLABS SHALL BE RADAR SCANNED PRIOR TO CORE DRILLING OR TRENCHING. ALL WORK, INCLUDING CORE DRILLING, RADAR SCAN, INSTALLATION OF FIRE STOPPING, & CONDUIT/CABLE INSTALLATION SHALL BE PERFORMED DURING NON-BUSINESS HOURS AND INCLUDED IN BASE BID. USE EXTREME CAUTION DURING ANY CUTTING OPERATION TO AVOID DAMAGE TO EXISTING EQUIPMENT/SYSTEMS. ANY ITEMS DAMAGED AS A RESULT OF CORE DRILLING SHALL BE REPAIRED AT NO COST TO THE CLIENT. ALL CORES SHALL BE FIRE SEALED.
8. FOR EACH WALL MOUNTED COMMUNICATIONS OUTLET, PROVIDE A 1900 JUNCTION BOX WITH AN EXTENDER COLLAR AND 1 INCH CONDUIT WITH DRAGLINE 6 INCHES ABOVE ACCESSIBLE CEILING FOR INSTALLATION OF CABLE BY OTHERS. TYPICAL FOR ALL LOW VOLTAGE OUTLETS ASSOCIATED WITH WALL MOUNTED EQUIPMENT LISTED ON DRAWING E-300, UON.
9. WHERE GFI RECEPTACLES ARE CIRCUITED WITH GENERAL CONVENIENCE RECEPTACLES, THE GFI RECEPTACLE SHALL BE THE LAST DEVICE ON THE CIRCUIT.
10. INSTALL CONDUIT EXPANSION FITTINGS AT ALL LOCATIONS WHERE CONDUITS CROSS BUILDING OR STRUCTURE EXPANSION JOINTS.
11. CEILING MOUNTED RECEPTACLES SHALL BE MOUNTED FLUSH TO CEILING.
12. UNLESS OTHERWISE NOTED, DISCONNECT SWITCHES, STARTERS, HOAS AND MOTOR RATED TOGGLE SWITCHES FOR MECHANICAL PUMPS, CABINET AND UNIT HEATERS, RETURN FANS, ROOF FANS, VAV BOXES, COMPRESSORS, FAN COIL UNITS, AIR HANDLERS AND CONDENSERS SHALL BE FURNISHED BY THE MECHANICAL CONTRACTOR AND INSTALLED BY THE ELECTRICAL CONTRACTOR. COORDINATE ALL WORK WITH THE MECHANICAL CONTRACTOR.
13. DISCONNECT SWITCHES FOR MOTORIZED DAMPERS, CFSD/SD AND VAV BOXES SUPPLIED BY MECHANICAL CONTRACTOR AND INSTALLED AND WIRED BY ELECTRICAL CONTRACTOR. SWITCHES NOT SHOWN ON PLANS.
14. INCLUDE IN BASE BID (4) 1P-20A CIRCUITS ON THE THIRD FLOOR (150' LENGTH EACH) FOR HVAC SYSTEM CONTROL PANELS. EXACT LOCATION OF CONTROL PANELS SHALL BE COORDINATED WITH DIVISION 23 IN THE FIELD. CIRCUITS SHALL ORIGINATE FROM THE FOLLOWING PANELBOARDS:

    THIRD FLOOR - PPW2-31,32,33,34
15. THE ELECTRICAL CONTRACTOR SHALL PROVIDE ALL CUTTING, PATCHING, PAINTING, AND FINAL RESTORATION REQUIRED TO FACILITATE THE DEMOLITION AND INSTALLATION OF ALL ELECTRICAL EQUIPMENT, INCLUDING BUT NOT LIMITED TO PANELBOARDS, CONDUITS, WIRING, DEVICES, FIXTURES, ETC. INCLUDING ABOVE CEILINGS. CONTRACTOR TO REMOVE AND REPLACE CEILINGS, AND OPEN AND PATCH WALLS, AS REQUIRED TO EXECUTE THE ELECTRICAL WORK.
16. LIGHTING AND LIGHTING CONTROLS SHALL BE PURCHASED BY THE OWNER FROM ELECTRIC LIGHTING AGENCIES (ELA). RECEIPT AND HANDLING OF THE LIGHTING AND LIGHTING CONTROLS SHALL BE BY THE GC. CONTRACTOR IS RESPONSIBLE FOR INSTALLATION OF LIGHTING AND LIGHTING CONTROLS, AS WELL AS ALL TESTING, COMMISSIONING AND TRAINING OF CLIENT STAFF.
17. ALL WORK ASSOCIATED WITH THIS PROJECT THAT IS INSTALLED IN SPACES OUTSIDE OF THE WCC TENANT SPACE SHALL BE LABELED EVERY 10' IDENTIFYING "WCC" AND CONDUIT TYPE (I.E. POWER, DATA, FIRE ALARM, GROUND, ETC.).
18. DELINEATION OF SCOPE OF WORK FOR ALL LOW VOLTAGE SYSTEMS, INCLUDING IT, AV, SECURITY, ETC.

    A.) GENERAL CONTRACTOR TO PROVIDE ALL POWER CONDUIT, CONDUCTORS, ETC. AS WELL AS ALL RACEWAYS/BACKBOXES FOR LOW VOLTAGE WIRING AND DEVICES.

    B.) LOW VOLTAGE CONTRACTOR TO PROVIDE ALL LOW VOLTAGE WIRING, TERMINATIONS, TESTING, JACKS, FACEPLATES, DEVICES, EQUIPMENT, TURNSTILES, ETC."

DEFINITION OF TERMS

1. WHEREVER IN THE CONTRACT DOCUMENTS THE WORD "CLIENT" IS USED, IT MUST BE UNDERSTOOD THAT "MARX REALTY GROUP" IS INTENDED.
2. WHEREVER IN THE CONTRACT DOCUMENTS THE WORD "ARCHITECT" IS USED, IT MUST BE UNDERSTOOD THAT "OTJ ARCHITECTS" IS INTENDED.
3. WHEREVER IN THE CONTRACT DOCUMENTS THE WORD "ENGINEER" IS USED, IT MUST BE UNDERSTOOD THAT "OLA CONSULTING ENGINEERS" IS INTENDED.
4. WHEREVER IN THE CONTRACT DOCUMENTS THE WORDS "ELECTRICAL UTILITY" OR "POWER COMPANY" ARE USED, IT MUST BE UNDERSTOOD THAT "CON EDISON" IS INTENDED.
5. WHEREVER IN THE CONTRACT DOCUMENTS THE WORDS "TELEPHONE UTILITY" OR "TELCO" ARE USED, IT MUST BE UNDERSTOOD THAT "VERIZON" IS INTENDED.
6. WHEREVER IN THE CONTRACT DOCUMENTS THE WORDS "FIRE ALARM SYSTEM" OR "FIRE ALARM VENDOR" ARE USED, IT MUST BE UNDERSTOOD THAT "RED HAWK FIRE & SECURITY" IS INTENDED.
7. "WORK" MUST BE DEEMED TO CONSIST OF ALL LABOR AND OPERATIONS, TRANSPORTATION, HOISTING, MATERIALS, TOOLS, EQUIPMENT, SERVICES, INSPECTIONS, INVESTIGATIONS, COORDINATION AND SUPERVISION REQUIRED AND / OR REASONABLY NECESSARY TO PRODUCE THE CONSTRUCTION REQUIRED BY THE CONTRACT DOCUMENTS.
8. "FURNISH" MEANS THE DESIGN, FABRICATION, PURCHASE AND DELIVERY TO THE JOB SITE.
9. "INSTALL OR INSTALLATION" MEANS THE ACT OF PHYSICALLY PLACING, APPLYING, SETTING, ERECTING, ANCHORING, SECURING, ETC., CONSTRUCTION MATERIALS, EQUIPMENT, FURNISHINGS, APPLIANCES, AND SIMILAR ITEMS SPECIFIED AND FURNISHED AT THE JOB SITE. INSTALLATION OF SPECIFIED ITEMS MUST BE COMPLETE IN ALL RESPECTS.
10. "PROVIDE" MEANS TO FURNISH AND INSTALL CONSTRUCTION MATERIAL, EQUIPMENT, ETC. AS DEFINED ABOVE.
11. THE FOLLOWING ARE DEFINITIONS OF SHOP DRAWING STAMP ACTIONS:

A. "NO EXCEPTIONS TAKEN" MEANS THAT THE SHOP DRAWING IS CORRECT AS TO PERFORMANCE, CAPACITY, ETC. AND SUBSTANTIAL CONFORMANCE TO THE CONTRACT DRAWINGS AND SPECIFICATIONS. FABRICATION AND/OR PURCHASE MAY COMMENCE.

B. "MAKE CORRECTIONS NOTED" MEANS THAT THE SHOP DRAWING IS CORRECT AS TO PERFORMANCE, CAPACITY, ETC. AND SUBSTANTIAL CONFORMANCE TO THE CONTRACT DRAWINGS AND/OR SPECIFICATIONS, SUBJECT TO AND IN COMPLIANCE WITH THE ANNOTATIONS AND/OR CORRECTIONS INDICATED ON THE SHOP DRAWING. FABRICATION AND/OR PURCHASE MAY COMMENCE.

C. "AMEND AND RESUBMIT" MEANS THAT THE COMMENTS AND/OR CORRECTION ARE SO EXTENSIVE AND IMPORTANT THAT THE REVIEWER WANTS TO SEE HOW THE COMMENTS AND/OR CORRECTIONS ARE RESOLVED PRIOR TO RELEASE FOR FABRICATION AND/OR PURCHASE. FABRICATIONS AND/OR PURCHASE MAY NOT COMMENCE.

D. "REJECTED" MEANS THAT THE SHOP DRAWING DOES NOT COMPLY OR CONFORM TO THE CONTRACT DRAWINGS AND/OR SPECIFICATIONS. FABRICATION AND/OR PURCHASE MAY NOT COMMENCE.

WIRELESS CLOCK SYSTEM NOTES

1. WIRELESS CLOCK SYSTEM SHALL BE VISIPLEX WIRELESS SYNCHRONIZED ANALOG CLOCK MODEL TS4142 OR APPROVED EQUAL. DESIGN OF THE WIRELESS CLOCK SYSTEM IS A DELEGATED DESIGN. CONTRACTOR IS RESPONSIBLE TO OBTAIN A SITE SPECIFIC DESIGN FROM THE VENDOR AND TO PROVIDE ALL ANCILLARY REPEATERS, EQUIPMENT, ETC. THAT ARE REQUIRED FOR A FULLY OPERATIONAL SYSTEM.
2. PAGING BASE STATION SHALL BE VISIPLEX WIRELESS PAGING BASE STATION MODEL VS4820 USING WIRELESS UHF FREQUENCY OR APPROVED EQUAL.
3. WIRELESS CLOCK TO HAVE A WHITE FACE WITH BLACK TRIM AND NUMBERS, THERMOPLASTIC FACE, 13" DIAMETER AND BATTERY OPERATED. CONTRACTOR TO PROVIDE BATTERIES FOR CLOCKS.
4. REFER TO PLANS FOR EXACT LOCATION AND QUANTITIES OF CLOCKS.
5. PERFORM A FULL OPERATION TEST ONCE SYSTEM IS INSTALLED PER MANUFACTURE'S INSTRUCTIONS. REPLACE ALL DEVICES THAT DO NOT PASS TEST.
6. PROVIDE TRAINING ON SYSTEM TO OWNER'S FACILITY STAFF.

TYPICAL BRANCH CIRCUIT WIRING LEGEND

2-#12 & 1-#12 GND (1-1P-20A OR 1-1P-15A CB)

3-#12 & 1-#12 GND (3P-20A OR 3P-15A CB)

2-#12 & 1-#12 GND (2P-20A OR 2P-15A CB)

NOTES:
1. EACH 120V AND 277V CIRCUIT SHALL HAVE A DEDICATED NEUTRAL CONDUCTOR. SHARED NEUTRAL HOMERUNS ARE NOT PERMITTED.
2. CONDUCTORS SHALL BE INCREASED FOR VOLTAGE DROP AND DERATING AS PER APPLICABLE ELECTRICAL CODE. FOR CIRCUITS THAT ARE BETWEEN 100' AND 150' IN LENGTH, PHASE AND NEUTRAL CONDUCTORS SHALL BE #10 AWG. FOR CIRCUITS THAT ARE BETWEEN 150' AND 225' IN LENGTH, PHASE AND NEUTRAL CONDUCTORS SHALL BE #8 AWG. FOR LENGTHS GREATER THAN 225' IN LENGTH, VERIFY CONDUCTOR SIZES WITH ENGINEER.

OLA Consulting Engineers
50 Broadway,
Hawthorne, NY 10532
914.747.2800

8 West 38th Street,
Suite 501
New York, NY 10018
646.849.4110

olace.com

CLIENT

MARX REALTY
8000 MALL WALK
YONKERS, NY 10704

No.	ISSUE OR REVISION	DATE
5	ISSUED FOR CONSTRUCTION	03/16/22
4	REVISED BID DRAWINGS	01/21/22
3	ISSUED FOR BID	12/13/21
2	ISSUED FOR PERMIT	11/11/21
1	ISSUED FOR REVIEW - 50% DWG SET	09/24/21

No use, reproduction or dissemination may be made of this drawing and the concepts set forth without the prior written consent of OLA Consulting Engineers, P.C. Copyright © 2022

PROJECT TITLE

WESTCHESTER COMMUNITY COLLEGE
BUILDING 11 THIRD FLOOR
CROSS COUNTY SHOPPING CENTER
YONKERS, NY

DRAWING TITLE

ELECTRICAL SYMBOLS, ABBREVIATIONS AND GENERAL NOTES

SEAL

SCALE	PROJECT NO.
AS NOTED	NTMC0053.00
DRAWN BY: CT	DRAWING NO.
CHECKED BY: DS	E-001
DATE: 09/24/21	

SPECIFICATIONS

E-1. SCOPE OF WORK

A. ALL WORK SHOWN ON THE DRAWINGS IS NEW UNLESS OTHERWISE NOTED EXISTING TO REMAIN (EX.). THIS CONTRACTOR SHALL PROVIDE ALL MATERIALS, LABOR, EQUIPMENT, TOOLS, APPLIANCES, SERVICES, HOISTING, SCAFFOLDING, SUPERVISION AND OVERHEAD FOR THE FURNISHING AND INSTALLING OF ALL THE ELECTRICAL AND RELATED WORK COMPLETE, IN ACCORDANCE WITH THE DRAWINGS AND SPECIFICATIONS, INCLUDING BUT NOT LIMITED TO THE FOLLOWING:

1. MODIFICATION OF EXISTING PANELBOARDS, BALANCING AND UPDATED TYPED DIRECTORIES.
2. REMOVAL, DISPOSAL, RELOCATION AND/OR INSTALLATION OF FIRE ALARM SYSTEM COMPONENTS, ELECTRICAL LIGHTING FIXTURES, SWITCHES, RECEPTACLES, WIRING, PANELBOARDS, DISCONNECT SWITCHES AND ASSOCIATED CONDUIT, ALARM WIRING AND ANY OTHER ELECTRICAL EQUIPMENT.
3. LIGHTING FIXTURES, COMPLETE WITH NECESSARY HANGER ASSEMBLIES, STEMS AND SWIVELS, COUPLINGS, LAMP AUXILIARIES, LAMPS, MISCELLANEOUS MOUNTING DEVICES AND HARDWARE TO MEET THE BOCA SEISMIC REQUIREMENTS.
4. JUNCTION AND OUTLET BOXES COMPLETE WITH COVERS, SWITCHES, RECEPTACLES AND ANY OTHER WIRING DEVICES AND SPECIAL COVERPLATES.
5. CONDUIT, CONDUIT FITTINGS, OUTLET BOXES, JUNCTION AND PULL BOXES, TROUGHS, WIREWAYS AND ALL APPURTENANCES NECESSARY FOR ELECTRICAL RACEWAY SYSTEMS, INCLUDING NECESSARY SUPPORTS AND FASTENERS.
6. INSULATED CONDUCTORS COMPLETE WITH SPLICES AND CONNECTIONS, INCLUDING CONNECTORS AND CONNECTION LUGS.
7. GROUNDING AND BONDING SYSTEM.
8. HOLES AND SLEEVES FOR CONDUITS PASSING THROUGH WALLS, FLOORS AND PARTITIONS.
9. TAGGING AND IDENTIFYING ALL EQUIPMENT AND DEVICES WITH NAMEPLATES.
10. FIELD TESTS OF ALL EQUIPMENT AND ITS OPERATIONS AS SPECIFIED.
11. CUTTING AND PATCHING AS REQUIRED FOR INSTALLATION OF ELECTRICAL WORK.
12. TEMPORARY POWER AND LIGHT AS REQUIRED.
13. FIRE ALARM SYSTEM MODIFICATION AS INDICATED.
14. AS-BUILT DRAWINGS.

E-2 MATERIAL AND WORKMANSHIP

A. GENERAL:

1. THE WORK PERFORMED SHALL BE "FIRST-CLASS WORK" IN EVERY RESPECT. THE WORK SHALL BE PERFORMED BY A LICENSED ELECTRICIANS SKILLED IN THEIR RESPECTIVE TRADES, WHO SHALL AT ALL TIMES BE UNDER THE SUPERVISION OF COMPETENT PERSONS.
2. WORK THAT IS SLIPSHOD, POORLY LAID OUT, NOT PERFECTLY ALIGNED, OR THAT IS NOT CONSISTENT WITH THE REQUIREMENTS GENERALLY ACCEPTED IN THE TRADE FOR "FIRST-CLASS WORK" SHALL NOT BE ACCEPTABLE.
3. IN ADDITION TO THE MATERIALS SPECIFIED ELSEWHERE, ALL OTHER MISCELLANEOUS ITEMS NECESSARY FOR THE COMPLETION OF THE WORK SHALL BE FURNISHED AND INSTALLED BY THE CONTRACTOR TO THE EXTENT THAT ALL SYSTEMS BE COMPLETE AND OPERATIVE.
4. ALL MATERIALS AND EQUIPMENT FURNISHED UNDER THIS SECTION SHALL BE NEW AND LISTED AND/OR LABELED BY THE UNDERWRITERS' LABORATORIES, INC., FOR THE APPLICATION, UNLESS OTHERWISE SPECIFIED HEREIN. MATERIALS, MATERIAL SIZES AND METHOD OF CONSTRUCTION NOT SPECIFIED SHALL BE AT LEAST EQUAL TO OR BETTER THAN THE STANDARDS AS LISTED BY THE UNDERWRITERS' LABORATORIES, INC., AND/OR THE REQUIREMENTS OF THE LAWS, REGULATIONS AND CODES MENTIONED HEREINAFTER. DEFECTIVE MATERIALS OR MATERIALS DAMAGED IN THE COURSE OF INSTALLATION OR TESTS SHALL BE REPLACED OR REPAIRED IN A MANNER MEETING WITH THE APPROVAL OF THE CLIENT.
5. ALL WORK UNDER THIS SECTION SHALL BE PERFORMED IN COOPERATION WITH THE WORK BY ALL OTHER CONTRACTORS AND SUBCONTRACTORS ON THE PROJECT, IN ORDER TO AVOID INTERFERENCES AND TO SECURE THE PROPER INSTALLATION OF ALL WORK. THIS CONTRACTOR SHALL REVIEW THE DRAWINGS AND SPECIFICATIONS COVERING THE WORK TO BE PERFORMED UNDER ALL SECTIONS, SO THAT HE UNDERSTANDS THE RELATION AND EXTENT OF THE WORK OF THIS SECTION WITH RESPECT TO THE WORK OF THE OTHER SECTIONS.
6. ALL WORK SHALL BE COORDINATED WITH THE OWNER & CLIENT AND SHALL MEET ALL CLIENT STANDARDS WHERE APPLICABLE AND SHALL BE SUBJECT TO APPROVAL FROM AN AUTHORIZED CLIENT REPRESENTATIVE. ALL MATERIALS USED SUCH AS CONDUIT, WIRING, LIGHT FIXTURES, WIRING DEVICES, ETC. SHALL MEET CLIENT STANDARDS UNLESS OTHERWISE INDICATED.

E-3 LAWS, REGULATIONS AND CODES

A. GENERAL:

1. ALL WORK UNDER THIS SECTION SHALL COMPLY WITH THE APPLICABLE FEDERAL, STATE, LOCAL CODES AND AUTHORITIES. WHERE REFERENCE IS MADE TO LAWS, CODES, REGULATIONS AND STANDARDS, THESE DOCUMENTS, INCLUDING THE LATEST REVISIONS AND AMENDMENTS THERETO IN EFFECT AS OF THE DATE OF BID OPENING, SHALL FORM PART OF THESE SPECIFICATIONS.

E-4 SHOP DRAWINGS

A. GENERAL: MANUFACTURER'S DATA OR SHOP DRAWINGS OF THE FOLLOWING APPARATUS GIVING FULL INFORMATION AS TO DIMENSIONS, MATERIALS, AND ALL INFORMATION PERTINENT TO THE ADEQUACY OF THE SUBMITTED EQUIPMENT INCLUDING WIRING DIAGRAMS SHALL ALSO BE SUBMITTED FOR APPROVAL AS DIRECTED:

1. CONDUIT
2. CONDUCTORS
3. WIRING DEVICES
4. SPECIAL OUTLETS/EQUIPMENT
5. LIGHTING FIXTURES
6. LIGHTING CONTROL DEVICES/SYSTEMS
7. EXIT LIGHTING UNITS
8. EMERGENCY LIGHT FIXTURES
9. DISCONNECT SWITCHES
10. FUSES
11. PANELBOARDS
12. SPDs
13. FIRE ALARM SYSTEM (DEVICES/WIRING DIAGRAM/CALCULATIONS)

E-5 RECORD DRAWINGS

A. GENERAL:

1. THE CONTRACTOR SHALL MAINTAIN AN ACCURATE RECORD OF ALL DEVIATIONS IN WORK AS ACTUALLY INSTALLED FROM WORK AS INDICATED. THIS RECORD SHALL BE UPDATED DAILY AND SHALL BE KEPT AVAILABLE AT THE SITE FOR INSPECTION. UPON COMPLETION OF THE WORK, AND BEFORE FINAL PAYMENT IS AUTHORIZED, MARKED PRINTS WITH SIGNED CERTIFICATION OF ACCURACY, SHALL BE DELIVERED TO THE OWNER'S REPRESENTATIVE.

E-6 INSTALLATION OF WORK

A. GENERAL:

1. THE CONTRACTOR SHALL BE RESPONSIBLE TO EXAMINE THE SITE AND CHECK ALL FIELD CONDITIONS. NOTIFY THE ENGINEER OF ANY CONDITION WHICH DIFFERS FROM THAT INDICATED ON THE PLAN.
2. ALL WORK SHALL BE CAREFULLY LAID OUT IN ADVANCE SO THAT UNNECESSARY CUTTING, CHANNELING, CHASING OR DRILLING OF WALLS, PARTITIONS, FLOORS, CEILINGS OR OTHER SURFACES WILL BE AVOIDED. WHERE WORK IS NECESSARY FOR THE PROPER INSTALLATION, SUPPORT OR ANCHORAGE OF RACEWAYS, OUTLETS OR OTHER ELECTRICAL WORK, IT SHALL BE CAREFULLY DONE IN SUCH A MANNER AS TO AVOID ANY DAMAGE. ALL WORK WHICH MAY BE DAMAGED SHALL BE REPAIRED TO THE SATISFACTION OF THE OWNER.
3. ALL ELECTRICAL WORK SHALL BE PROTECTED AGAINST DAMAGE DURING CONSTRUCTION AND ANY WORK DAMAGED OR MOVED OUT OF LINE AFTER ROUGHING-IN SHALL BE REPAIRED AND RESET TO THE APPROVAL OF THE OWNER.
4. THE CONTRACTOR SHALL BE RESPONSIBLE FOR COORDINATING ALL ROUTING IN THE FIELD WITH EXISTING EQUIPMENT. PROVIDE ALL NECESSARY OFFSETS TO AVOID EXISTING EQUIPMENT & OBSTRUCTIONS.
5. CORE DRILLING OR TRENCHING THROUGH AN EXISTING FLOOR SLAB, WHEN REQUIRED, SHALL BE COORDINATED WITH THE OWNER. FLOOR SLABS SHALL BE RADAR SCANNED PRIOR TO CORE DRILLING OR TRENCHING. ALL WORK, INCLUDING CORE DRILLING, RADAR SCAN, INSTALLATION OF FIRE STOPPING, & CONDUIT/CABLE INSTALLATION SHALL BE PERFORMED DURING NON-BUSINESS HOURS AND INCLUDED IN BASE BID. USE EXTREME CAUTION DURING ANY CUTTING OPERATION TO AVOID DAMAGE TO EXISTING EQUIPMENT/SYSTEMS. ANY ITEMS DAMAGED AS A RESULT OF CORE DRILLING SHALL BE REPAIRED AT NO COST TO THE CLIENT. ALL CORES SHALL BE FIRE SEALED.
6. CONTRACTOR SHALL VERIFY CONDUIT ROUTING WITH OWNER AND/OR CLIENT PRIOR TO INSTALLATION.

B. ELECTRIC SERVICE:

1. NOT USED.

C. CONDUIT WORK:

1. ALL THREADED JOINTS IN CONDUIT WORK SHALL BE MADE WATERTIGHT BY A COATING OF THOMAS & BETTS KOPR-SHIELD COMPOUND ON THE MALE THREADS ONLY. WHENEVER THREADS ARE CUT, THEY SHALL BE COATED WITH KOPR-SHIELD BEFORE MAKING UP THE CONNECTION.

2. EXPOSED CONDUIT ON CEILING SHALL BE RUN PARALLEL OR PERPENDICULAR TO WALL AND VISE VERSA TO CEILING, WHEN INSTALLED ON WALL. SECURE CONDUIT CLAMPS AND SUPPORTS TO MASONRY MATERIALS BY TOGGLE BOLT, EXPANSION BOLT OR STEEL INSERT. SPACING OF CONDUIT SUPPORTS SHALL NOT EXCEED 7 FEET.

3. THE ENDS OF ALL CONDUIT SHALL BE CAREFULLY REAMED OUT FREE FROM BURRS BEFORE INSTALLATION AND AFTER THREADING. THE END OF EACH CONDUIT 1" AND SMALLER SHALL BE PROVIDED WHERE IT ENTERS A JUNCTION BOX, OUTLET BOX, CABINET, ETC., WITH A LOCK NUT AND BUSHINGS. FOR CONDUITS 1-1/4" AND LARGER, INSULATED BUSHINGS SHALL BE USED. IF INSULATED BUSHINGS ARE OF THE FULLY INSULATED TYPE, AN ADDITIONAL LOCK NUT SHALL BE USED INSIDE JUNCTION BOX OR CABINET BEFORE INSTALLING THE BUSHINGS.

4. FLEXIBLE SEAL-TITE CONDUIT AND SEAL-TITE FITTINGS SHALL BE USED TO CONNECT ALL MOTORS SO AS TO ISOLATE THE MOTION OR VIBRATION FROM THE RIGID CONDUIT SYSTEM AND THE BUILDING. AN EQUIPMENT GROUNDING CONDUCTOR SHALL BE PROVIDED IN ALL FLEXIBLE CONDUITS.

5. CONDUITS SHALL BE SECURELY FASTENED IN PLACE WITH STRAPS, HANGERS AND SUPPORTS AS REQUIRED.

6. CONDUIT IN HUNG CEILINGS SHALL BE SUPPORTED IN AN APPROVED MANNER FROM THE BUILDING STRUCTURE.

7. FLEXIBLE METALLIC CONDUIT OR MC CABLE SHALL BE USED FOR BRANCH CIRCUIT WIRING ABOVE HUNG CEILINGS AND IN PARTITIONS.

8. THE CONTRACTOR SHALL PROVIDE PULL BOXES, JUNCTION BOXES, CONDUITS, CONDUIT ELBOWS, AND OFFSETS IN CONDUIT RUNS WHICH INTERFERE WITH THE STRUCTURAL WOOD OR STEEL, MECHANICAL EQUIPMENT, DUCTWORK, PIPING, ETC., TO SUIT THE FIELD CONDITIONS.

9. NO MORE THAN THREE RIGHT ANGLE BENDS SHALL BE PERMITTED IN CONDUIT BETWEEN ANY TWO TERMINATION OR PULLBOXES. PROVIDE ADDITIONAL PULLBOXES AS REQUIRED.

10. TELEPHONE SERVICE CONDUITS SHALL HAVE ONE 18"x18"x8" PULL BOX AFTER 270 DEGREES OF BENDS WITH A MAXIMUM OF 360 DEGREES OF BEND PER RUN. ALL BENDS IN CONDUIT SHALL BE SWEEPING BENDS FOR FIBER OPTIC CABLE. 90 DEGREE BENDS SHALL NOT BE PERMITTED.

11. ALL MC CABLE RUNS ABOVE HUNG CEILINGS SHALL BE SECURED TO BUILDING STRUCTURE. NO MC CABLES SHALL BE LEFT UNSUPPORTED ON DUCTWORK OR CEILING TILES.

12. WHERE MULTIPLE HOME RUNS ARE ROUTED TOGETHER IN THE SAME RACEWAY LONGER THAN 24 INCHES, CONDUCTORS SHALL BE INCREASED TO #10 AWG FOR UP TO EIGHT CONDUCTORS (HOT & NEUTRAL) MAXIMUM. INSTALLATION SHALL BE IN ACCORDANCE WITH THE AFOREMENTIONED CODE.

D. CABLE AND WIRING WORK:

1. CONDUCTORS FOR BRANCH CIRCUITS SHALL BE OF SIZES INDICATED ON THE ELECTRICAL DRAWINGS, BUT SHALL NOT BE SMALLER THAN NO. 12 AWG EXCEPT AS OTHERWISE SHOWN OR SPECIFIED.
2. ALL JOINTS, SPLICES AND TAPS FOR WIRING CONNECTIONS SHALL BE MADE WITH MATERIALS AS HEREINAFTER SPECIFIED.
3. CONDUCTORS SHALL BE CONTINUOUS FROM OUTLET TO OUTLET, AND NO SPLICES OR CONNECTIONS SHALL BE MADE, EXCEPT WITHIN OUTLET BOXES, JUNCTION BOXES OR CABINETS.
4. THE NEUTRAL WIRE SHALL NOT BE USED AS A GROUND WIRE. THE NEUTRAL WIRE SHALL BE AN INSULATED WIRE AND SHALL BE CONNECTED TO THE GROUND SYSTEM AT ONE PLACE ONLY. THIS CONNECTION SHALL BE MADE AT THE BEGINNING OF THE SEPARATELY DERIVED SYSTEM.
5. TELEPHONE/DATA CABLING RUN ABOVE THE HUNG CEILING SHALL NOT BE LEFT UNSUPPORTED. ALL CABLING SHALL BE SUPPORTED FROM THE BUILDING STRUCTURE.

E. ELECTRICAL GROUNDING AND BONDING:

1. ALL CABINETS AND TERMINAL BOXES SHALL BE BONDED TO THE CONDUIT SYSTEM, AND WHERE APPLICABLE TO THE GROUND WIRE.
2. THE ELECTRICAL RACEWAY SYSTEM, METALLIC ELECTRICAL EQUIPMENT FRAMES, HOUSING AND ENCLOSURES SHALL BE BONDED TOGETHER AND GROUNDED.
3. THE EQUIPMENT BONDING JUMPERS SHALL NOT BE SMALLER THAN THE SIZES LISTED IN THE AFOREMENTIONED CODE.
4. GROUND LUGS FOR CABLE CONNECTIONS SHALL BE SIMILAR TO BURNDY, TYPE YAV FOR CONDUCTOR SIZES AS PERMITTED BY THE AFOREMENTIONED CODES.
5. ALL GROUNDING AND BONDING SHALL BE INSTALLED IN A NEAT AND WORKMANLIKE MANNER AND SHALL BE AS INCONSPICUOUS AS POSSIBLE. ALL WORK EXPOSED TO MECHANICAL DAMAGE SHALL BE PROTECTED IN AN APPROVED MANNER. ALL GROUND SCREWS AND BUSHINGS SHALL BE MADE TIGHT.
6. THE PROVISION OF A FULLY-WIRED GROUNDING SYSTEM DOES NOT RELIEVE THE CONTRACTOR OF HIS RESPONSIBILITY FOR PROVIDING CONTINUITY OF THE METALLIC RACEWAY SYSTEM. THE METALLIC RACEWAY SYSTEM SHALL BE ASSEMBLED AND BONDED TOGETHER TO FORM A CONTINUOUS PATH FROM THE MOST REMOTE OUTLET.
7. ALL GROUNDING WIRES, EXCEPT AS OTHERWISE SPECIFIED OR INDICATED ON THE DRAWINGS, SHALL BE SIZED IN ACCORDANCE WITH THE RULES OF THE AFOREMENTIONED CODE.
8. FOR CONNECTION TO THE GROUNDING SYSTEM, THE CONTRACTOR SHALL FURNISH AND INSTALL A GROUND LUG WELDED TO THE INTERIOR OF EVERY METALLIC BOX, CABINET, HOUSING OR ENCLOSURE WHICH IS FURNISHED UNDER THIS OR ANY OTHER SECTION OF THE SPECIFICATIONS.
9. EACH STEEL BOX SHALL BE CONNECTED BY THE USE OF A GROUNDING BUSHING ON RIGID CONDUIT, O.Z. TYPE BLG.
10. A SEPARATE GREEN INSULATED GROUND WIRE SHALL BE RUN WITH EACH CIRCUIT AS INDICATED.

F. OUTLET BOXES:

1. OUTLET BOXES SHALL BE INSTALLED AT ALL LOCATIONS SHOWN ON THE DRAWINGS FOR ALL ELECTRICAL DEVICES INCLUDING CONVENIENCE RECEPTACLES AND LIGHTING FIXTURES. THE LOCATIONS OF THE OUTLETS ON THE DRAWINGS ARE APPROXIMATE. ACTUAL LOCATIONS SHALL BE COORDINATED IN THE FIELD.
2. ALL OUTLETS SHALL BE INSTALLED IN ACCESSIBLE LOCATIONS AND NONE SHALL BE INSTALLED ABOVE DUCTS, BEHIND FURRING OR OTHER SIMILAR LOCATIONS. ANY OUTLET DESIGNATED AS PROVIDING POWER FOR A PARTICULAR PIECE OF EQUIPMENT SHALL BE ACCESSIBLE FOR DISCONNECTION WITH SAID UNIT IN PLACE. ALL JUNCTION BOXES SHALL BE LABELED IDENTIFYING THE CIRCUIT(S) CONTAINED.
3. OUTLETS IN HUNG CEILING AREAS SHALL BE CONCEALED ABOVE HUNG CEILING FOR RECESSED LIGHTING FIXTURES; OR SET FLUSH WITH HUNG CEILING FOR SURFACE AND PENDANT MOUNTED LIGHTING FIXTURES. THESE OUTLETS SHALL BE SECURELY SUPPORTED FROM THE FRAMING WORK WHICH SUPPORTS THE CEILING OR FROM THE BUILDING STRUCTURE ABOVE THE CEILING.
4. WHERE NECESSARY FOR THE SUPPORT OF THE ELECTRICAL WORK, BARS, ANGLES OR CHANNEL MEMBERS OF SUITABLE SIZE SHALL BE FURNISHED AND INSTALLED.
5. MOUNTING HEIGHTS FOR ELECTRICAL DEVICES SHALL BE AS INDICATED ON ARCHITECTURAL PLANS. IF THERE ARE NO ARCHITECTURAL PLANS FOR THIS PROJECT THE MOUNTING SHALL BE AS FOLLOWS, UNLESS OTHERWISE NOTED ON THE PLANS:

   a. LIGHT SWITCHES: 48" AFF TO CENTERLINE OF BOX.
   b. WALL MOUNTED OCCUPANCY SENSORS: 48" AFF TO CENTERLINE OF BOX.
   c. RECEPTACLES: 18" AFF TO CENTERLINE OF BOX.
   d. DATA/TELEPHONE OUTLETS: 18" AFF TO CENTERLINE OF BOX.
   e. FIRE ALARM MANUAL PULL STATION: 42" MIN./48" MAX. AFF TO HANDLE.
   f. FIRE ALARM AUDIO AND/OR STROBE: 80" AFF TO BOTTOM OF STROBE LENS OR 6" FROM CEILING TO TOP OF STROBE LENS, WHICHEVER IS LOWER.

6. BLANK STEEL BOX COVERS SHALL BE INSTALLED ON ALL UNUSED OUTLETS UNLESS OTHERWISE INDICATED. IN FINISHED AREAS, BLANK COVERS SHALL BE PROVIDED. COLOR SHALL BE COORDINATED WITH THE ARCHITECT.
7. OUTLET BOXES FOR SWITCHES, RECEPTACLES AND COMMUNICATION OUTLETS SHALL NOT BE MOUNTED BACK-TO-BACK.

G. MECHANICAL EQUIPMENT CONNECTIONS:

1. FOR ALL MOTORS, STARTERS, ANNUNCIATORS, ETC. TO BE FURNISHED AND INSTALLED UNDER OTHER SECTIONS OF THE SPECIFICATIONS, THIS CONTRACTOR SHALL PROVIDE AND INSTALL ALL SAFETY DISCONNECTS SHOWN OR REQUIRED U.O.N.
2. CONTROL EQUIPMENT DEVICES SHALL BE FURNISHED AND INSTALLED UNDER OTHER SECTIONS OF THE SPECIFICATIONS.
3. THIS CONTRACTOR SHALL BE RESPONSIBLE FOR INSTALLING ALL WIRING BETWEEN THE CONTROL DEVICE AND THE MOTOR. THE POWER SUPPLY LEADS TO THE MOTOR FROM THE CONTROLLER SHALL BE THE SAME SIZE AS THE FEEDS INDICATED ON THE DRAWINGS.
4. THIS CONTRACTOR SHALL MAKE ALL ELECTRICAL CONNECTIONS BETWEEN MOTORS AND STARTERS AND LEAVE UNITS AND EQUIPMENT READY TO OPERATE.
5. ALL WIRING FOR MOTOR CONTROL INTERLOCK AND AUTOMATIC TEMPERATURE CONTROL SHALL BE FURNISHED AND INSTALLED BY MECHANICAL CONTRACTOR. PROVIDE 120 VOLT SUPPLIES FOR CONTROL EQUIPMENT AS DEFINED ON THE DRAWINGS AND APPROVED SHOP DRAWINGS.
6. EXACT LOCATIONS OF EQUIPMENT SHALL BE AS INDICATED ON MECHANICAL DRAWINGS.

E-7 MATERIALS

A. CONDUIT:

1. MINIMUM SIZE OF CONDUIT SHALL BE 3/4" EXCEPT FOR LOW VOLTAGE CONTROL AND WIRING BETWEEN LIGHT FIXTURES WHERE 1/2" CONDUIT MAYBE USED OR UNLESS OTHERWISE INDICATED ON THE DRAWINGS OR SPECIFIED.
2. FLEXIBLE METALLIC CONDUIT, EXCEPT WHERE OTHERWISE SPECIFIED, SHALL BE SINGLE-STRIP ELECTROGAL VANIZED, SPIRALLY-WOUND, INTERLOCKED, STEEL FLEXIBLE CONDUIT.
3. MC CABLE MAY BE USED FOR WIRING IN CONCEALED AREAS OR AS INDICATED ON DRAWINGS. EMT SHALL BE USED IN ALL EXPOSED AREAS AND FOR WIRING PENETRATING FLOOR.
4. LOCKNUTS SHALL BE HEAVY GAUGE SHEET STEEL TYPE WITH A PLATED CORROSION-RESISTANT COATING.
5. BUSHINGS SHALL BE MALLEABLE IRON INSULATED TYPE WITH A CADMIUM COATING.
6. ALL CONDUIT INSTALLED IN WET LOCATIONS, OR WHERE EXPOSED TO WEATHER SHALL BE RIGID GALVANIZED STEEL CONDUIT (RGS), CONDUITS INSTALLED UNDERGROUND SHALL BE SCHEDULE 40 PVC AND INTERIOR CONDUITS SHALL BE EMT U.O.N.
7. ALL MAIN FEEDERS AND CIRCUITRY FOR MECHANICAL EQUIPMENT OR IN EXPOSED AREAS SHALL BE IN CONDUIT.

B. SLEEVES:

1. SLEEVES THROUGH FIRE RESISTANT WALLS AND CEILINGS SHALL BE COMPLETELY PACKED WITH NON-COMBUSTIBLE FIRE STOP MATERIAL RATED FOR THE PARTICULAR WALL BEING PENETRATED. PENETRATIONS THRU FIRE RATED MATERIAL SHALL BE MINIMIZED.

C. WIRE AND CABLE:

1. ALL WIRE AND CABLE SHALL HAVE SOFT ANNEALED COPPER CONDUCTORS WITH 600 VOLT INSULATION, AND SHALL BE LISTED AND APPROVED BY UNDERWRITERS' LABORATORIES, AND SHALL MEET ALL SPECIFICATIONS OF THE IPCEA-NEMA STANDARDS.
2. ALL WIRE FOR GENERAL USE, UNLESS SHOWN OR SPECIFIED OTHERWISE, SHALL BE TYPE THHN. ALL WIRE INSTALLED UNDERGROUND OR ON ROOFTOPS SHALL BE TYPE XHHW-2 UNLESS OTHERWISE NOTED. WIRE #10 AWG AND SMALLER SHALL BE CONSISTENTLY COLOR CODED THROUGHOUT BY MEANS OF COLORING APPLIED TO THE OUTER COVERING TO INDICATE PHASE AND NEUTRAL. ALL OTHER WIRES AND CABLES SHALL BE COLOR CODED BY APPLICATION OF A BAND OF APPROPRIATELY COLORED PLASTIC TAPE APPLIED OVER THE JACKETS AT EACH OUTLET, JUNCTION, PULL AND TERMINAL POINTS. THE COLOR CODING FOR WIRING SHALL BE:

	120/208V	277/480V
PHASE A	BLACK	BROWN
PHASE B	RED	ORANGE
PHASE C	BLUE	YELLOW
NEUTRAL	WHITE	GRAY
GROUND	GREEN	GREEN

3. ALL BRANCH CIRCUIT CONDUCTORS SHALL BE MINIMUM #12 AWG SIZE UNLESS OTHERWISE INDICATED.
4. GROUND WIRE AND CABLE SHALL BE COPPER CONDUCTORS.
5. 120 VOLT CONDUCTOR LENGTHS IN EXCESS OF 100 FEET SHALL BE #10 AWG MIN.

D. CONNECTORS FOR WIRE AND CABLE:

1. WIRE AND CABLE CONNECTORS SHALL BE SOLDERLESS, MECHANICAL, SOLID COPPER OR COPPER ALLOY TYPES. CONNECTORS SHALL BE BUCHANAN ELECTRICAL PRODUCTS COPPER SQUEEZE-ON TYPE WITH MOLDED RUBBER OR VINYL CAP, MINNESOTA MINING AND MANUFACTURING COMPANY "SCOTCHLOCK: OR IDEAL INDUSTRIES "SUPER NUT" SPRING CONNECTOR WITH MOLDED VINYL CAP.
2. CONNECTORS FOR CONDUCTORS LARGER THAN #8 AWG SHALL BE MECHANICAL BOLTED TYPE, INSULATED WITH CLAMP-ON MOLDED COVERS. THE MANUFACTURER SHALL BE OZ ELECTRICAL MANUFACTURING COMPANY OR BURNDY ENGINEERING COMPANY.
3. ELECTRICAL INSULATING TAPE SHALL BE VINYL PLASTIC TYPE WITH PRESSURE ADHESIVE, MINNESOTA MINING AND MANUFACTURING COMPANY "SCOTCH" NO. 33 ELECTRICAL TAPE APPLIED IN ACCORDANCE WITH THE MANUFACTURER'S RECOMMENDATION. ALL CONNECTORS AND CONNECTIONS HAVING IRREGULAR SURFACES SHALL BE PROPERLY PADDED WITH "SCOTCHFIL" PUTTY PRIOR TO APPLICATION OF TAPE.
4. ALL CABLE TIES INSTALLED IN PLENUM SHALL BE PANDUIT, TYPE HALAR, U.L. LISTED/APPROVED FOR USE IN PLENUM AREAS. ALL OTHER LOCATIONS SHALL BE NYLON TIE STRAPS AS MANUFACTURED BY THOMAS AND BETTS.

E. WIRING AND OUTLET DEVICES:

1. UNLESS OTHERWISE NOTED, WIRING DEVICES SHALL BE AS HEREIN SPECIFIED OR AS PER BUILDING STANDARDS, INDUSTRIAL GRADE. DEVICES AND COVER PLATES SHALL SHALL BE GANGED UNDER COMMON FACEPLATE U.O.N. AND SHALL MATCH EXISTING DEVICES. VERIFY IN FIELD.
2. DUPLEX RECEPTACLES SHALL BE 15 OR 20 AMPERE, TWO-POLE, THREE WIRE, 125 VOLT, SELF GROUNDING, NEMA 5-15 OR 5-20, WITH MATCHING DEVICE PLATE.
3. ISOLATED GROUND DUPLEX RECEPTACLE SHALL BE 15 OR 20 AMPERE, 125 VOLT, NEMA 5-15 OR 5-20, (ORANGE) WITH WHITE COVER PLATE.
4. SINGLE POLE, THREE-WAY AND FOUR-WAY SWITCHES SHALL BE 15 OR 20 AMPERE, 120/277 VOLTS, TOGGLE TYPE, WITH MATCHING DEVICE PLATE.
5. GFI RECEPTACLE SHALL BE 15 OR 20 AMPERE, TWO-POLE, THREE WIRE, 125 VOLT, NEMA 5-15 OR 5-20, WITH MATCHING DEVICE PLATE. COORDINATE COLOR WITH ARCHITECT.

F. OUTLET AND JUNCTION BOXES:

1. RECESSED CEILING FIXTURE OUTLETS SHALL BE 4-11/16" SQUARE SHEET METAL BOX WITH BLANK COVER AND SUITABLE HANGER BAR; BOX TO BE FASTENED TO CEILING SUSPENSION MEMBERS IN AN APPROVED MANNER, NOT LESS THAN 1'-0" FROM FIXTURE OPENING.
2. EXTENSION RINGS FOR FLUSH OUTLETS SHALL BE GALVANIZED, DRAWN SHEET STEEL 4" OCTAGONAL OR SQUARE, 4-11/16" SQUARE RINGS TO SUIT FLUSH OUTLETS, 1-1/2" DEEP OR DEEPER WHERE NECESSARY.
3. ALL EQUIPMENT EXPOSED TO THE OUTDOORS SHALL BE IN A NEMA-3R ENCLOSURE, INCLUDING THE GFI RECEPTACLES.

G. MISCELLANEOUS MATERIALS:

1. PIPE STRAPS FOR EXPOSED CONDUIT SHALL BE HEAVY DUTY CADMIUM OR ZINC COATED, ONE SCREW, MALLEABLE RIGID CONDUIT CLAMPS, COMPLETE WITH BACKSTRAPS (CLAMP BACKS), APPLETON ELECTRIC COMPANY #17100 AND #27100 LINE.
2. HANGER RODS SHALL BE GALVANIZED OR CADMIUM PLATED THREADED STEEL RODS OF ADEQUATE SIZE TO SUPPORT THE LOAD WHICH THEY CARRY. MINIMUM DIAMETER SHALL BE 1/2".
3. INSERTS IN EXISTING CONCRETE WORK SHALL BE EXPANSION ANCHORS WITH TAPPED STEEL OR BRASS CORE NUTS SET IN DRILLED HOLES. PIERCE, PHILLIPS READ HEAD, STAR OR ACKERMAN-JOHNSON EXPANSION NUTS WILL BE ACCEPTABLE.
4. SPECIAL FASTENERS SHALL COMPRISE MISCELLANEOUS TYPES OF CONDUIT AND BOX FASTENERS OF MALLEABLE IRON OR STEEL WITH A CORROSION-RESISTANT COATING OF CADMIUM OR ZINC; THESE SHALL BE

SPECIFICATIONS CONTINUED ON NEXT PAGE.

OLA Consulting Engineers
50 Broadway,
Hawthorne, NY 10532
914.747.2800

8 West 38th Street,
Suite 501
New York, NY 10018
646.849.4110

olace.com

CLIENT

MARX REALTY
8000 MALL WALK
YONKERS, NY 10704

No.	ISSUE OR REVISION	DATE
5	ISSUED FOR CONSTRUCTION	03/16/22
4	REVISED BID DRAWINGS	01/21/22
3	ISSUED FOR BID	12/13/21
2	ISSUED FOR PERMIT	11/11/21
1	ISSUED FOR REVIEW - 50% DWG SET	09/24/21

No use, reproduction or dissemination may be made of this drawing and the concepts set forth without the prior written consent of OLA Consulting Engineers, PC. Copyright © 2022

PROJECT TITLE

WESTCHESTER COMMUNITY COLLEGE
BUILDING 11 THIRD FLOOR
CROSS COUNTY SHOPPING CENTER
YONKERS, NY

DRAWING TITLE

ELECTRICAL SPECIFICATIONS

SEAL	SCALE	PROJECT NO.
	AS NOTED	NTMC0053.00
	DRAWN BY: CT	DRAWING NO.
	CHECKED BY: DS	E-002
	DATE: 09/24/21	

SPECIFICATIONS CONTINUED

PROVIDED AS REQUIRED OR NECESSARY TO COMPLETE THE INSTALLATION OF ELECTRICAL WORK. THE TYPE SELECTED SHALL BE OF ADEQUATE STRENGTH FOR THE LOAD TO WHICH IT IS SUBJECTED AND OF A DESIGN SUITED TO THE INSTALLATION CONDITIONS.

5. FASTENING HARDWARE SHALL BE CADMIUM OR ZINC-PLATED STEEL, SHEET METAL OR MACHINE SCREWS, BOLTS, NUTS, WASHERS, SHIMS AND SIMILAR FASTENING ACCESSORY HARDWARE.
6. REFER TO ENGINEERING DRAWINGS (ELECTRICAL, MECHANICAL OR PLUMBING) FOR DETAIL.

H. LIGHTING FIXTURES:

1. FURNISH AND INSTALL ALL LIGHTING FIXTURES SHOWN AND AS DESCRIBED ON THE DRAWINGS. ALL NEW FIXTURES SHALL BE AS INDICATED BY THE FIXTURE SCHEDULE. ALL FIXTURES SHALL BE FURNISHED AND INSTALLED COMPLETE WITH ALL MOUNTING HARDWARE AS REQUIRED BY SPECIFIC CEILING CONSTRUCTION OR OTHER MOUNTING METHODS. ALSO PROVIDE ALL YOKES, BACKBOXES, APPROVED HANGERS, ALL REQUIRED MISCELLANEOUS HARDWARE AND LAMPS. ALL STEEL PARTS SHALL BE BONDERIZED AND PHOSPHATIZED. ALL FIXTURES AND TRIMS SHALL BE FREE FROM LIGHT LEAKS.
2. SUPPORT EACH FIXTURE SECURELY. RECESSED FLUORESCENT FIXTURES SHALL BE SECURED AT A MINIMUM OF TWO POINTS TO THE BUILDING STRUCTURE TO MEET THE LOCAL BUILDING CODE SEISMIC REQUIREMENTS.
3. UPON COMPLETION OF WORK AND AFTER THE BUILDING AREA IS BROOM CLEAN, ALL FIXTURES SHALL BE MADE CLEAN. USE DESTATITIZING CLOTH ON ALL PLASTIC AND GLASS MATERIAL.
4. RELAMPING ACCESS SHALL REQUIRE NO SPECIAL TOOLS.

I. NEW CIRCUIT BREAKER PANELBOARDS:

1. FURNISH AND INSTALL CIRCUIT BREAKER PANELBOARDS AS INDICATED ON THE DRAWINGS. PANELBOARDS SHALL BE DEAD FRONT SAFETY TYPE EQUIPPED WITH THERMAL-MAGNETIC, BOLTED TYPE, MOLDED CASE CIRCUIT BREAKERS OF FRAME AND TRIP RATINGS AS SHOWN ON THE DRAWINGS. PANELBOARD BUS STRUCTURE AND MAIN LUGS OR MAIN BREAKER SHALL HAVE CURRENT RATINGS AS DRAWINGS. ALL BUSBARS SHALL BE COPPER. ALL PANELBOARDS SHALL BE SEISMIC RATED ACCORDING TO THE LOCAL BUILDING CODE REQUIREMENTS.
2. CIRCUIT BREAKERS SHALL BE EQUIPPED WITH INDIVIDUALLY INSULATED, BRACED AND PROTECTED CONNECTORS. THE FRONT FACES OF ALL CIRCUIT BREAKERS SHALL BE FLUSH WITH EACH OTHER. LARGE PERMANENT INDIVIDUAL CIRCUIT NUMBERS SHALL BE AFFIXED TO EACH BREAKER IN A UNIFORM POSITION. TRIPPED INDICATION SHALL BE CLEARLY SHOWN BY THE BREAKER HANDLE TAKING A POSITION BETWEEN ON AND OFF. PROVISIONS FOR ADDITIONAL BREAKERS SHALL BE SUCH THAT NO ADDITIONAL CONNECTORS WILL BE REQUIRED TO ADD BREAKERS.
3. EACH PANELBOARD, AS A COMPLETE UNIT, SHALL HAVE A RATING EQUAL TO OR GREATER THAN THE INTEGRATED EQUIPMENT RATING SHOWN ON THE DRAWINGS. PANELBOARD ASSEMBLY SHALL BE ENCLOSED IN A STEEL CABINET. THE RIGIDITY AND GAUGE OF STEEL TO BE AS SPECIFIED IN UL STANDARD 50 FOR CABINETS. THE SIZE OF WIRING GUTTERS SHALL BE IN ACCORDANCE WITH UL STANDARD 67 FOR PANELBOARDS. FRONTS SHALL INCLUDE DOORS AND HAVE FLUSH, BRUSHED STAINLESS STEEL, CYLINDER TUMBLER-TYPE LOCKS WITH CATCHES AND SPRING-LOADED DOOR PULLS. THE FLUSH LOCK SHALL NOT PROTRUDE BEYOND THE FRONT OF THE DOOR. ALL PANELBOARD LOCKS SHALL BE KEYED ALIKE. FRONT SHALL HAVE ADJUSTABLE INDICATING TRIM CLAMPS WHICH SHALL BE COMPLETELY CONCEALED WHEN THE DOORS ARE CLOSED. DOORS SHALL BE MOUNTED BY COMPLETELY CONCEALED STEEL HINGES. FRONTS SHALL NOT BE REMOVABLE WITH DOOR IN THE LOCKED POSITION. A CIRCUIT DIRECTORY FRAME AND CARD WITH A CLEAR PLASTIC COVERING SHALL BE PROVIDED ON THE INSIDE OF THE DOOR. THE DIRECTORY CARD SHALL PROVIDE A SPACE AT LEAST 1/4" HIGH AND 3" LONG OR EQUIVALENT FOR EACH CIRCUIT. THE DIRECTORY SHALL BE TYPED TO IDENTIFY THE LOAD FED BY EACH CIRCUIT. FRONTS SHALL BE OF CODE GAUGE, FULL FINISHED STEEL WITH RUST-INHIBITING PRIMER AND BAKED ENAMEL FINISH.
4. THE PANELBOARD INTERIOR ASSEMBLY SHALL BE DEAD FRONT WITH PANELBOARD FRONT REMOVED. MAIN LUGS OR MAIN BREAKER SHALL BE BARRIERED ON FIVE SIDES. THE BARRIER IN FRONT OF THE MAIN LUGS SHALL BE HINGED TO A FIXED PART OF THE INTERIOR. THE END OF THE BUS STRUCTURE OPPOSITE THE MAINS SHALL BE BARRIERED.
5. 208/120 VOLT PANELBOARDS SHALL BE PROVIDED WITH FACTORY INSTALLED 100% RATED NEUTRAL BUS AND GROUND BUS WHICH SHALL HAVE PROVISIONS FOR EACH CIRCUIT IN THE PANELBOARD. EQUIPMENT GROUND BUS SHALL BE BRAZED TO PANELBOARD ENCLOSURE.
6. PANELBOARDS SHALL BE LISTED BY UNDERWRITERS' LABORATORIES AND SHALL BEAR THE UL LABEL.

J. DISTRIBUTION TRANSFORMERS:

1. NOT USED.

K. DISTRIBUTION TRANSFORMERS FOR NON-LINEAR LOADS:

1. NOT USED.

L. DISCONNECT SWITCHES:

1. THE CONTRACTOR SHALL FURNISH AND INSTALL FUSIBLE OR NON-FUSIBLE DISCONNECT SWITCHES AS REQUIRED AND/OR SHOWN ON THE DRAWINGS.
2. THE DISCONNECT SWITCHES, UNLESS OTHERWISE INDICATED OR SPECIFIED, SHALL BE HEAVY-DUTY, QUICK-MAKE, QUICK-BREAK OPERATED, IN NEMA 1 OR 3R ENCLOSURES, OF A CAPACITY, TYPE AND NUMBER OF POLES AS NOTED ON THE DRAWINGS. THE MAIN LUGS SHALL BE ADEQUATE TO ACCEPT THE SIZES OF CABLE INDICATED ON THE DRAWINGS.
3. ALL DISCONNECT SWITCHES SHALL BE FRONT OPERATED AND EACH SHALL CONTAIN A GROUNDING LUG WELDED TO THE INSIDE OF THE SWITCH ENCLOSURE.
4. SWITCHES SHALL BE HORSEPOWER RATED FOR LOAD SERVED AND RATED FOR 200KAIC RMS SYMMETRICAL FAULT CURRENT.
5. SWITCHES SHALL HAVE PROVISIONS TO BE LOCKED IN THE OPEN POSITION WITH CLIPS TO ACCEPT CLASS J FUSES.
6. SWITCHES SHALL MEET NEMA STANDARD KS-1-1990 FOR TYPE HD SWITCHES AND SHALL BE U.L. LISTED.

M. FUSES:

1. ALL FUSES SHALL BE UL LISTED.
2. FUSE SIZE SHALL BE AS INDICATED ON DRAWINGS AND/OR IN ACCORDANCE WITH THE AFOREMENTIONED CODE.
3. FUSES SHALL BE BUSSMAN, LOWPEAK, DUAL ELEMENT, CURRENT LIMITING, TIME DELAY, CLASS J UNLESS OTHERWISE NOTED.
4. FURNISH THREE SPARE FUSES (SAME AS SPECIFIED) OF EACH SIZE AND TURNOVER TO BUILDING ENGINEER.

N. PULLBOXES AND TROUGHS:

1. PULLBOXES AND TROUGHS WITH COVERS SHALL BE FABRICATED FROM MINIMUM #12 USSG GALVANIZED SHEET STEEL WITH ALL SEAMS AND JOINTS WELDED AND GROUND SMOOTH. COVERS SHALL BE SECURED TO PULLBOXES WITH NICKEL OR CADMIUM PLATED, OVAL HEAD SCREWS PROVIDED WITH STOP BEAD WASHERS. TROUGHS SHALL HAVE HINGED COVERS AND SHALL BE HELD CLOSED WITH EXTERNAL CLAMPS. DIMENSIONS OF BOXES AND TROUGHS SHALL BE AS REQUIRED BY ARRANGEMENT OF CONDUITS, EQUIPMENT OR APPLICABLE CODE REQUIREMENTS.
2. PULLBOXES AND TROUGHS SHALL BE FINISHED INSIDE AND OUTSIDE WITH A SHOP-APPLIED COAT OF ASA #61 LIGHT GRAY ENAMEL.
3. THE CONTRACTOR SHALL PROVIDE ALL PULLBOXES REQUIRED TO PULL WIRES IN CONDUIT RUNS WHETHER INDICATED ON THE DRAWINGS OR NOT. BOXES AND TROUGHS USING CONCENTRIC OR ACENTRIC KNOCKOUTS SHALL BE GROUNDED TO THE INCOMING CONDUITS BY MEANS OF GROUNDING FITTINGS AND BONDING JUMPERS. OZ TYPE BLG INSULATED GROUNDING BUSHINGS, AS SPECIFIED ELSEWHERE, SHALL BE USED. BONDING JUMPERS SHALL BE COPPER SIZED IN ACCORDANCE WITH THE AFOREMENTIONED CODE. A GROUND LUG SHALL BE WELDED INSIDE EACH BOX AND TROUGH.

O. ALTERATIONS AND REMOVAL OF EXISTING EQUIPMENT, CONDUIT & WIRING:

1. THE EXISTING BUILDING ELECTRICAL SYSTEMS SHALL BE MAINTAINED IN OPERATION DURING THE CONSTRUCTION PERIOD. EXISTING SYSTEMS SHALL NOT BE SHUT DOWN NOR SHALL CONNECTIONS BE MADE THERETO WITHOUT PRIOR APPROVAL OF THE OWNER.
2. CERTAIN EXISTING CONDUITS AND ASSOCIATED WIRING ARE INDICATED ON THE DRAWINGS ACCORDING TO THE BEST INFORMATION AVAILABLE. CERTAIN OTHER EXISTING CONDUITS AND ASSOCIATED WIRING MAY NOT BE SHOWN. THE CONTRACTOR SHALL MAKE EVERY EFFORT TO DETERMINE THE LOCATION OF EXISTING CONDUIT AND WIRING AS REQUIRED FOR NEW CONSTRUCTION OR IF DAMAGED DURING CUTTING OPERATIONS, REPLACE/REPAIR AT NO EXPENSE TO THE OWNER.
3. WHERE EQUIPMENT IS REMOVED OR WHERE WALLS AND CEILINGS ARE DEMOLISHED, WIRING DEVICES, CONDUIT, WIRING AND INSTALLATION MATERIAL (FITTINGS, BOXES, HANGERS, SUPPORTS, ETC.) THAT IS NOT TO BE REUSED SHALL BE REMOVED. ALL CONDUITS REMOVED SHALL BE CUT FLUSH WITH CONSTRUCTION AND OPENINGS PATCHED. ALL WIRING REMOVED SHALL BE DISCONNECTED AS FAR BACK AS THE BRANCH CIRCUIT PANELBOARD TERMINALS UNLESS OTHERWISE NOTED. WHERE WIRING IS TO REMAIN IN EXISTING CONDUITS TO MAINTAIN CONTINUITY OF CIRCUITS AND PASSES THROUGH OUTLET BOXES NOT TO BE REUSED FOR WIRING DEVICES OR LIGHTING FIXTURES, SUCH OUTLETS SHALL BE FURNISHED WITH COVERPLATES. ACTIVE CIRCUITS, IF REQUIRED AND NECESSARY TO REMAIN, SHALL BE REROUTED WITH NEW MATERIALS.
4. ALL EQUIPMENT WHICH IS BEING REMOVED AND NOT BEING REUSED SHALL BE RETURNED TO THE OWNER OR DISPOSED OF AS DIRECTED.
5. CONTRACTOR SHALL MEASURE STEADY STATE LOAD CURRENTS ON EACH PANELBOARD FEEDER OR EACH PANELBOARD THAT WAS ALTERED. SHOULD THE DIFFERENCE AT ANY PANELBOARD BETWEEN PHASES EXCEED 20 PERCENT, REARRANGE CIRCUITS IN PANELBOARD TO BALANCE THE PHASE LOAD WITHIN 20 PERCENT. TAKE CARE TO MAINTAIN PROPER PHASING FOR MULTI-WIRE BRANCH CIRCUITS. UPDATE DIRECTORIES ACCORDINGLY.

E-8 FIRE ALARM SYSTEM MODIFICATIONS

A. SEE ADDRESSABLE FIRE ALARM SYSTEM BOOK SPECIFICATION SECTION 284621.11 FOR ADDITIONAL INFORMATION.

E-9 PAINTING

A. PULL BOXES AND WIREWAYS SHALL BE SHOP PAINTED INSIDE AND OUTSIDE WITH ONE COAT OF PRIMER AND ONE COAT OF ENAMEL UNDERCOATER IN A LIGHT GRAY COLOR AS APPROVED BY THE CLIENT'S REPRESENTATIVE.

E-10 IDENTIFICATION

A. THE CONTRACTOR SHALL PROVIDE UPDATED TYPE WRITTEN PANELBOARD DIRECTORIES IN ALL NEW PANELBOARDS AND ANY EXISTING PANELBOARD THAT HAS BEEN ALTERED. CONTRACTOR SHALL TRACE CIRCUITS TO REMAIN AS REQUIRED.

B. ALL ELECTRICAL EQUIPMENT, SUCH AS PANELS, AND ALL OTHER SIMILAR ITEMS WHICH ARE FURNISHED UNDER THIS HEADING OF THE SPECIFICATIONS SHALL BE ADEQUATELY IDENTIFIED WITH ENGRAVED LAMINATED PLASTIC NAMEPLATE HAVING BLACK BACKGROUNDS AND WHITE LETTERS. WORDING ON THE NAMEPLATES SHALL CLEARLY INDICATE THE NAMES AND FUNCTIONS OF THE EQUIPMENT. THE CONTRACTOR SHALL SUBMIT FOR APPROVAL, FIVE COPIES OF A LIST OF ALL EQUIPMENT TO BE IDENTIFIED TOGETHER WITH THE WORDING TO BE USED ON THE NAMEPLATES BEFORE ORDERING.

C. A MAINTENANCE LABEL SHALL BE AFFIXED TO ALL EQUIPMENT REQUIRING PREVENTATIVE MAINTENANCE. TWO COPIES OF ALL MAINTENANCE MANUALS SHALL BE PROVIDED TO THE CLIENT.

D. ALL FEEDERS SHALL BE TAGGED WITH APPROVED-TYPE STENCILED METAL TAGS IN ALL PANELS AND PULLBOXES THROUGH WHICH THEY ARE ROUTED. THIS TAGGING SHALL INCLUDE FEEDER NUMBER, PANEL SOURCE, CIRCUIT NUMBER, FEEDER SIZE AND EQUIPMENT SUPPLIED.

E. EACH DUPLEX AND QUAD RECEPTACLE SHALL BE LABELED WITH THE CIRCUIT NUMBER WHICH IT SERVES.

E-11 TESTING

A. ALL CIRCUITS SHALL BE TESTED FOR UNWANTED GROUNDS AND PROPER PHASE RELATION.

B. THE CONTRACTOR SHALL PROVIDE QUALIFIED PERSONNEL TO CONDUCT AND/OR TO ASSIST THE CLIENT'S REPRESENTATIVE TO CONDUCT OPERATING TESTS AT THE COMPLETION OF THE WORK. THESE OPERATING TESTS WILL INCLUDE CHECKING THE FOLLOWING ELECTRICAL SYSTEMS:

1. WIRING DEVICES: A CHECK OF RECEPTACLES SHALL BE CHECKED FOR SMOOTHNESS OF OPERATION, CLEANLINESS OF INSTALLATION, CONDUCTOR CONNECTIONS, MANUFACTURER, RATINGS AND GROUNDING CONNECTIONS.
2. LIGHTING FIXTURES: OPERATION CHECK.
3. LIGHTING CONTROL SYSTEMS: ENGAGE A FACTORY-AUTHORIZED SERVICE REPRESENTATIVE TO TEST AND INSPECT COMPONENTS, ASSEMBLIES, AND EQUIPMENT INSTALLATIONS, INCLUDING CONNECTIONS. PERFORM FULL OPERATIONAL TESTS. ADJUST CONTROLS AS NEEDED.
4. TEST ALL CIRCUITS FOR PROPER FUNCTIONING AND CONNECTION.
5. MECHANICAL EQUIPMENT: PROVIDE PERSONNEL TO ASSIST MECHANICAL CONTRACTOR IN TESTING ELECTRICALLY POWERED MECHANICAL EQUIPMENT.
6. FIRE ALARM SYSTEM: SEE ADDRESSABLE FIRE ALARM SYSTEM BOOK SPECIFICATION SECTION 284621.11.
7. ELECTRICAL CURRENT READINGS IN ALL PANELBOARDS AFFECTED BY WORK TO VERIFY BALANCING OF LOADS.
8. FOR ALL LOW VOLTAGE ELECTRICAL POWER CONDUCTORS AND CABLE, PERFORM EACH VISUAL AND MECHANICAL INSPECTION AND ELECTRICAL TEST STATED IN NETA ACCEPTANCE TESTING SPECIFICATION. CERTIFY COMPLIANCE WITH TEST PARAMETERS.
9. FOR PANELBOARDS, PERFORM EACH VISUAL AND MECHANICAL INSPECTION AND ELECTRICAL TEST STATED IN NETA ACCEPTANCE TESTING SPECIFICATION. CERTIFY COMPLIANCE WITH TEST PARAMETERS.
10. FOR ENCLOSED SWITCHES AND CIRCUIT BREAKERS, PERFORM EACH VISUAL AND MECHANICAL INSPECTION AND ELECTRICAL TEST STATED IN NETA ACCEPTANCE TESTING SPECIFICATION. CERTIFY COMPLIANCE WITH TEST PARAMETERS.
11. FOR SURGE PROTECTION DEVICES (SPD'S), PERFORM EACH VISUAL AND MECHANICAL INSPECTION AND ELECTRICAL TEST RECOMMENDED BY THE MANUFACTURER. CERTIFY COMPLIANCE WITH TEST PARAMETERS.

E-12 TEMPORARY LIGHT AND POWER

A. THE CONTRACTOR SHALL FURNISH, INSTALL, MAINTAIN AND UPON COMPLETION, REMOVE SYSTEM OF TEMPORARY LIGHTING AND POWER FOR THE USE OF ALL CONSTRUCTION TRADES AS NECESSARY.

B. WIRING SHALL BE PROVIDED FOR TEMPORARY USE DURING BUILDING CONSTRUCTION, INCLUDING GROUNDING AND FUSED MAIN CUT-OFF SWITCHES. TEMPORARY ELECTRIC LINES WITH BRANCH SWITCHES SHALL BE PROVIDED FOR LIGHTING AND FOR TAPS FOR ELECTRIC TOOLS, PUMPS AND OTHER TEMPORARY EQUIPMENT; ALL EQUIVALENT TO A MAIN LINE LOOPED THROUGH FLOOR SPACES AND UP STAIRWELLS OR SHAFTS. ALL POWER OUTLETS SHALL BE GROUNDED TO AN EQUIPMENT GROUND WIRE IN AN APPROVED MANNER. ELECTRIC LINES SHALL BE EXTENDED TO POWER TOOLS WHICH CANNOT BE LOCATED WITHIN REACH OF EXTENSION CORDS.

C. LIGHT BULBS SHALL BE PROVIDED IN SUFFICIENT QUANTITY TO LIGHT THE BUILDING FOR SAFETY PURPOSES. EXTENSION CORDS SHALL BE PROVIDED AS MAY BE ESSENTIAL TO THE PROPER EXECUTION OF THE WORK.

D. TEMPORARY LIGHTING SHALL BE PROVIDED FOR ALL STAIRS AND OTHER LOCATIONS WHERE NEEDED FOR SAFETY OR THE PROPER EXECUTION OF WORK AND SHALL CONFORM TO ALL OSHA STANDARDS.

E. THE ELECTRICAL CONTRACTOR SHALL MAINTAIN TEMPORARY LIGHTING AND POWER SYSTEMS IN GOOD WORKING CONDITION, INCLUDING THE RELOCATION AND REINSTALLATION WHEN REQUIRED TO AVOID INTERFERENCE WITH THE PROGRESS OF CONSTRUCTION.

F. PROVIDE GROUND FAULT PERSONNEL PROTECTION FOR ALL SINGLE PHASE, 15 AND 20 AMPERE RECEPTACLES. ALL RECEPTACLES AND PORTABLE CORD CONNECTORS SHALL HAVE NEMA STANDARD LOCKING TYPE CONFIGURATIONS AND SHALL CONFORM TO ALL OSHA STANDARDS.

5

OLA Consulting Engineers
50 Broadway,
Hawthorne, NY 10532
914.747.2800

8 West 38th Street,
Suite 501
New York, NY 10018
646.849.4110

olace.com

CLIENT

MARX REALTY
8000 MALL WALK
YONKERS, NY 10704

No.	ISSUE OR REVISION	DATE
5	ISSUED FOR CONSTRUCTION	03/16/22
4	REVISED BID DRAWINGS	01/21/22
3	ISSUED FOR BID	12/13/21
2	ISSUED FOR PERMIT	11/11/21
1	ISSUED FOR REVIEW - 50% DWG SET	09/24/21

No use, reproduction or dissemination may be made of this drawing and the concepts set forth without the prior written consent of OLA Consulting Engineers, PC. Copyright © 2022

PROJECT TITLE

WESTCHESTER COMMUNITY COLLEGE
BUILDING 11 THIRD FLOOR
CROSS COUNTY SHOPPING CENTER
YONKERS, NY

DRAWING TITLE

ELECTRICAL
SPECIFICATIONS

SEAL	SCALE	PROJECT NO.
	AS NOTED	NTMC0053.00
	DRAWN BY: CT	DRAWING NO.
	CHECKED BY: DS	E-003
	DATE: 09/24/21	

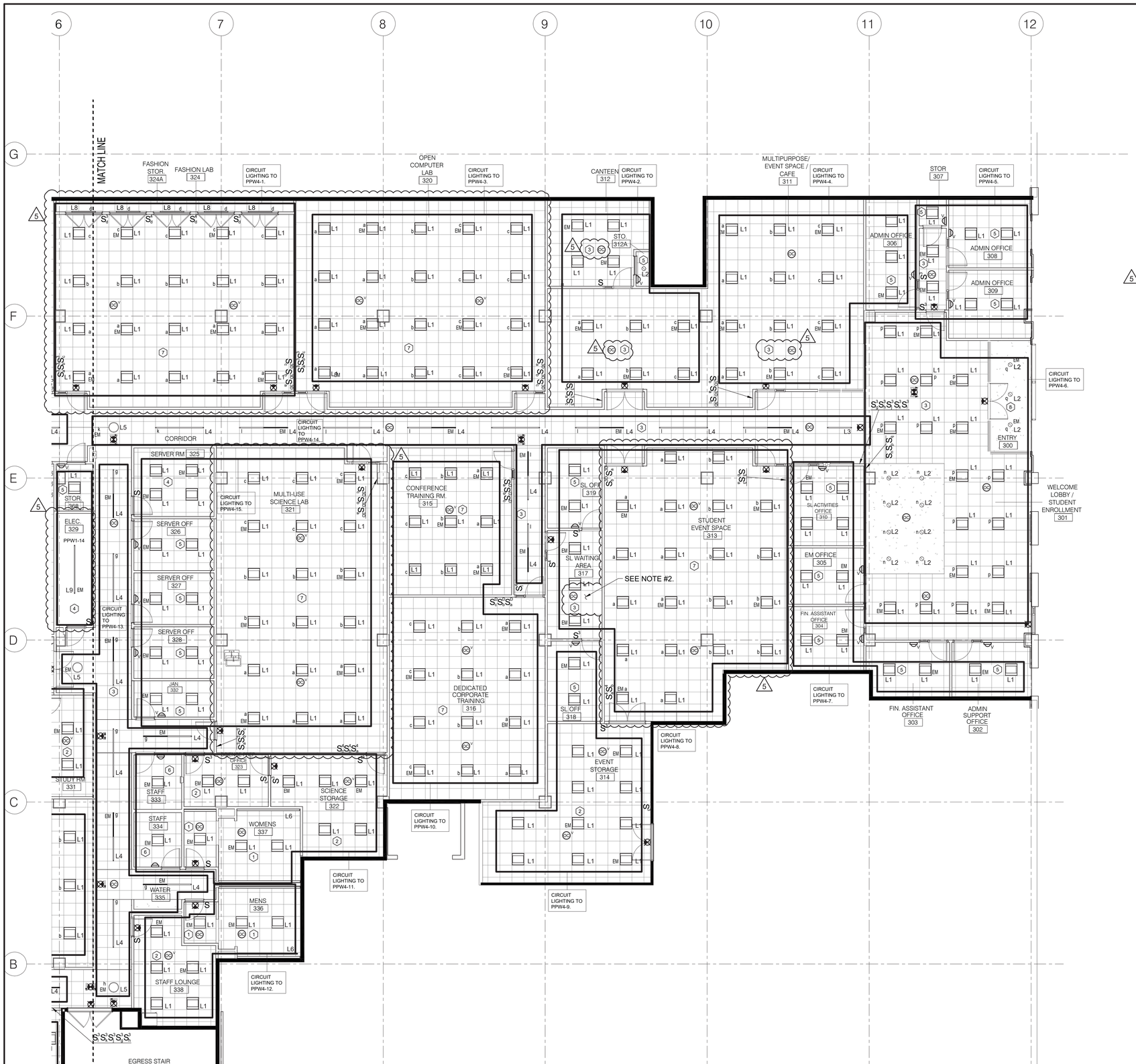

2 ELECTRICAL THIRD FLOOR LIGHTING PLAN - SIDE A
SCALE: 1/8" = 1'-0"

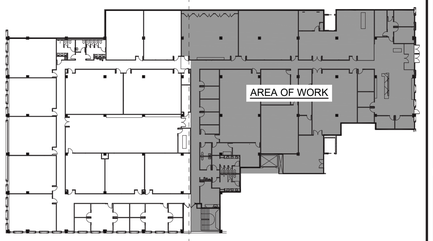

1 KEY PLAN - SIDE A
SCALE: NONE

NOTES:

1. SEE ELECTRICAL ROOM PLAN ON DRAWING E-202 FOR ADDITIONAL INFORMATION.
2. (5) ROOM 317 SHALL BE PROGRAMMED SO THAT MOTION DETECTED IN OFFICES 318 & 319 WILL KEEP LIGHTS ON.

DESIGN INTENT - LIGHTING CONTROL SYSTEM

1. LIGHTING CONTROL SYSTEM IS BASED ON N-LIGHT BY SENSOR SWITCH (KAREN BLACKMAN (212) 462-0088 x5237) OR APPROVED EQUAL. (OTHER ACCEPTABLE MANUFACTURERS ARE LUTRON & COOPER LIGHTING.)
2. LIGHTING CONTROL COMPONENTS SHOWN ARE FOR GENERAL DESIGN INTENT. ALL COMPONENTS AND WIRING ARE NOT SHOWN. CONTRACTOR SHALL BE RESPONSIBLE FOR ALL NECESSARY COMPONENTS, WIRING (LINE AND LOW VOLTAGE) AND PROGRAMMING FOR A FULLY OPERATIONAL SYSTEM. CONTRACTOR IS RESPONSIBLE FOR FULL DESIGN OF SYSTEM BASED ON THE DESIGN INTENT INCLUDED ON THESE DRAWINGS.
3. THE CONTRACTOR SHALL BE RESPONSIBLE TO COORDINATE LIGHTING CONTROLS WITH LIGHT FIXTURES.
4. ALL LIGHT FIXTURE AND LIGHTING CONTROL SUBMITTALS SHALL BE SUBMITTED AT THE SAME TIME FOR APPROVAL.
5. EXTERIOR MOUNTED LIGHT FIXTURES ARE TO BE CONTROLLED VIA PHOTOCELL WITH MANUAL OVERRIDE SWITCH. PROVIDE SEPARATE CONTROL CIRCUIT FOR THE FOLLOWING:

   - ENTRY CANOPY LIGHTING

LIGHTING CONTROL LEGEND

1 - LOW VOLTAGE WALL SWITCH WITH CEILING MOUNT OCCUPANCY SENSOR.
2 - LOW VOLTAGE MANUAL ON WALL SWITCH WITH CEILING MOUNT VACANCY SENSOR.
3 - TIME CLOCK WITH OCCUPANCY SENSOR OVERRIDE AFTER HOURS.
4 - LINE VOLTAGE MANUAL WALL SWITCH.
5 - LINE VOLTAGE WALL SWITCH VACANCY SENSOR.
6 - LINE VOLTAGE WALL SWITCH OCCUPANCY SENSOR.
7 - LOW VOLTAGE MANUAL ON WALL SWITCH WITH CEILING MOUNT VACANCY SENSOR WITH DIMMING.
8 - EXTERIOR LIGHTING.

OLA Consulting Engineers
50 Broadway,
Hawthorne, NY 10532
914.747.2800
8 West 38th Street,
Suite 501
New York, NY 10018
646.849.4110
olace.com

CLIENT

MARX REALTY
8000 MALL WALK
YONKERS, NY 10704

No.	ISSUE OR REVISION	DATE
5	ISSUED FOR CONSTRUCTION	03/16/22
4	REVISED BID DRAWINGS	01/21/22
3	ISSUED FOR BID	12/13/21
2	ISSUED FOR PERMIT	11/11/21
1	ISSUED FOR REVIEW - 50% DWG SET	09/24/21

No use, reproduction or dissemination may be made of this drawing and the concepts set forth without the prior written consent of OLA Consulting Engineers, PC. Copyright © 2022

PROJECT TITLE

WESTCHESTER COMMUNITY COLLEGE
BUILDING 11 THIRD FLOOR
CROSS COUNTY SHOPPING CENTER
YONKERS, NY

DRAWING TITLE

ELECTRICAL THIRD FLOOR LIGHTING PLAN - SIDE A

SEAL

SCALE	PROJECT NO.
AS NOTED	NTMC0053.00
DRAWN BY: CT	DRAWING NO.
CHECKED BY: DS	E-201
DATE: 09/24/21	

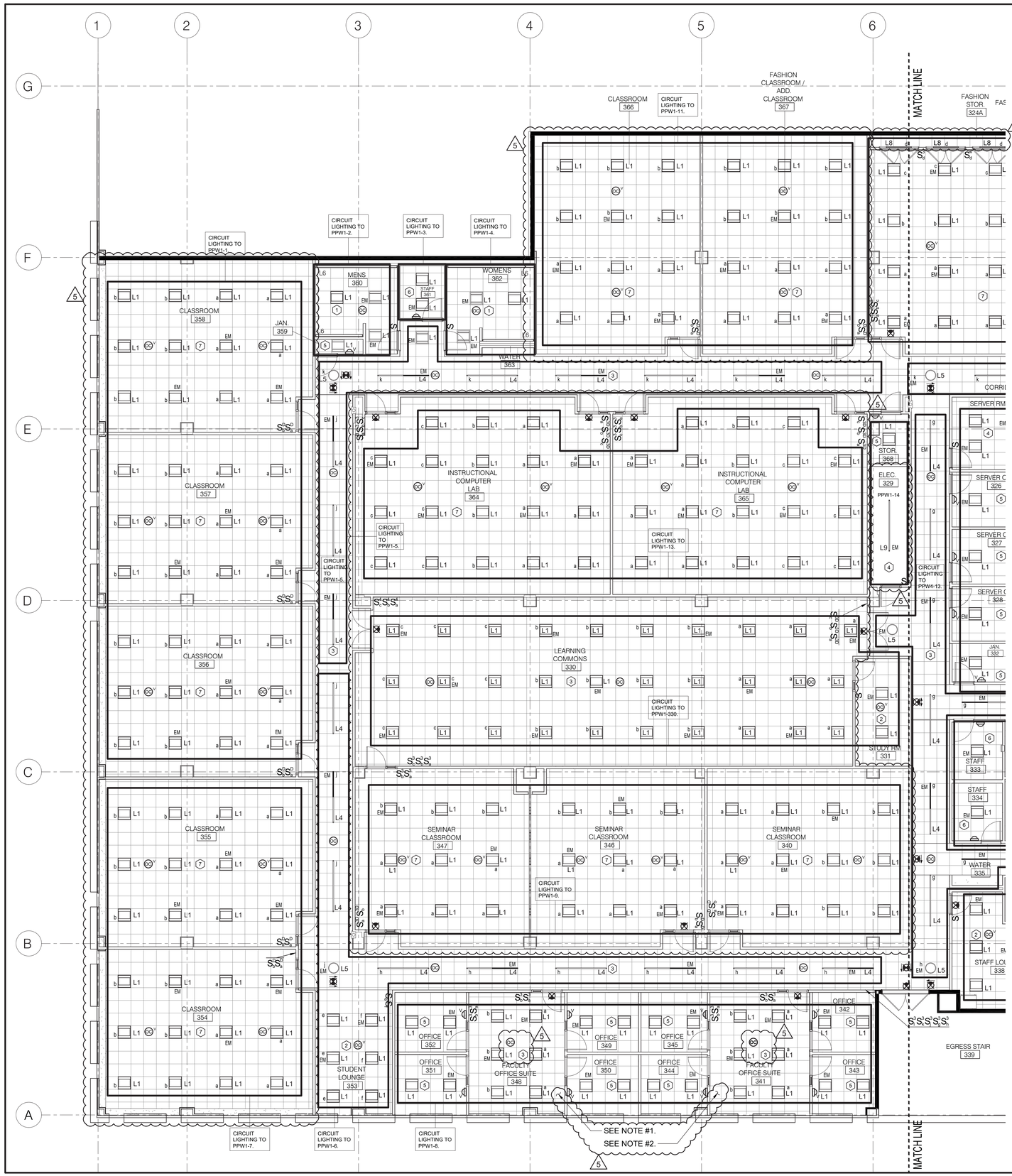

NORTH

3 ELECTRICAL THIRD FLOOR LIGHTING PLAN - SIDE B

SCALE: 1/8" = 1'-0"

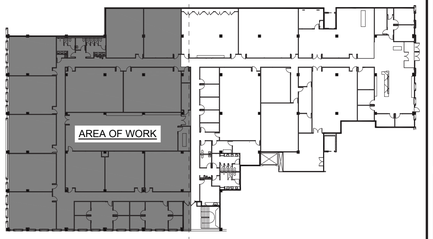

NORTH

2 KEY PLAN - SIDE B

SCALE: NONE

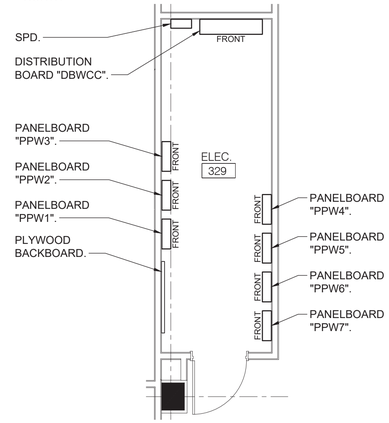

NORTH

1 ELECTRICAL ROOM PLAN

SCALE: 1/4" = 1'-0"

LIGHTING CONTROL LEGEND

1. LOW VOLTAGE WALL SWITCH WITH CEILING MOUNT OCCUPANCY SENSOR.
2. LOW VOLTAGE MANUAL ON WALL SWITCH WITH CEILING MOUNT VACANCY SENSOR.
3. TIME CLOCK WITH OCCUPANCY SENSOR OVERRIDE AFTER HOURS.
4. LINE VOLTAGE MANUAL WALL SWITCH.
5. LINE VOLTAGE WALL SWITCH VACANCY SENSOR.
6. LINE VOLTAGE WALL SWITCH OCCUPANCY SENSOR.
7. LOW VOLTAGE MANUAL ON WALL SWITCH WITH CEILING MOUNT VACANCY SENSOR WITH DIMMING.
8. EXTERIOR LIGHTING.

NOTES:

5

1. ROOM 348 SHALL BE PROGRAMMED SO THAT MOTION DETECTED IN OFFICES 349, 350, 351 & 352 WILL KEEP LIGHTS ON.
2. ROOM 341 SHALL BE PROGRAMMED SO THAT MOTION DETECTED IN OFFICES 342, 343, 344 & 345 WILL KEEP LIGHTS ON.

OLA Consulting Engineers
50 Broadway,
Hawthorne, NY 10532
914.747.2800

8 West 38th Street,
Suite 501
New York, NY 10018
646.849.4110

olace.com

CLIENT

MARX REALTY
8000 MALL WALK
YONKERS, NY 10704

No.	ISSUE OR REVISION	DATE
5	ISSUED FOR CONSTRUCTION	03/16/22
4	REVISED BID DRAWINGS	01/21/22
3	ISSUED FOR BID	12/13/21
2	ISSUED FOR PERMIT	11/11/21
1	ISSUED FOR REVIEW - 50% DWG SET	09/24/21

No use, reproduction or dissemination may be made of this drawing and the concepts set forth without the prior written consent of OLA Consulting Engineers, PC. Copyright © 2022

PROJECT TITLE

WESTCHESTER COMMUNITY COLLEGE
BUILDING 11 THIRD FLOOR
CROSS COUNTY SHOPPING CENTER
YONKERS, NY

DRAWING TITLE

ELECTRICAL THIRD FLOOR LIGHTING PLAN - SIDE B

SEAL	SCALE	PROJECT NO.
	AS NOTED	NTMC0053.00
	DRAWN BY: CT	DRAWING NO.
	CHECKED BY: DS	E-202
	DATE: 09/24/21	

DELINEATION OF RESPONSIBILITIES FOR LOW VOLTAGE SYSTEMS

ITEM	GENERAL CONTRACTOR		LOW VOLTAGE CONTRACTOR		WCC		REMARKS
	FURNISH	INSTALL	FURNISH	INSTALL	FURNISH	INSTALL	
CONDUIT/BACK BOXES/RACEWAYS FOR LV SYSTEMS	X	X					
POWER FOR LV SYSTEMS	X	X					
WIRELESS CLOCK SYSTEM	X	X					
FIRE ALARM SYSTEM EQUIPMENT/DEVICES/WIRING/ETC.	X	X					
LOW VOLTAGE CABLES AND TERMINATIONS (CAT 6A & SPEAKER WIRE)			X	X			SPEAKER WIRE - PYRAMID HIGH QUALITY 16 AWG SPEAKER ZIP WIRE, MODEL #RSW16100
RJ-45 KEYSTONE JACKS AND FACEPLATES			X	X			
FRAME RELAY RACKS			X	X			19" WIDE, 52U FRAME RELAY RACK, MODEL #55053-X15
PUNCHDOWN PATCH PANELS			X	X			PUNCHDOWN PATCH PANEL CATEGORY 6A, FLAT, 48 PORT, MODEL #DP486X88TGY - PROVIDE AS REQUIRED.
HORIZONTAL CABLE MANAGERS			X	X			PATCHLINK™ HORIZONTAL CABLE MANAGER, 2 RU, BLACK, MODEL #WMPF1E - PROVIDE AS REQUIRED.
VERTICAL CABLE MANAGERS			X	X			NETRUNNER™ VERTICAL CABLE MANAGER, 45 RU, BLACK, MODEL #WMPV45E - PROVIDE AS REQUIRED.
LADDER RACK			X	X			
WALL MOUNTED ELECTRICAL SCREENS				X	X		
PROJECTORS				X	X		
SUSPENDED CEILING PLATE FOR PROJECTORS				X	X		
CLASSROOM/HYFLEX FLAT PANEL DISPLAY				X	X		
CLASSROOM/HYFLEX CAMERAS				X	X		
CLASSROOM/HYFLEX CAMERA MOUNTS				X	X		
CEILING MOUNTED CLASSROOM/HYFLEX/EVENT LOCATION SPEAKERS				X	X		
CLASSROOM/HYFLEX MICROPHONES				X	X		
CLASSROOM/HYFLEX AMPLIFIERS				X	X		
CLASSROOM/HYFLEX ENCODERS				X	X		
CLASSROOM/HYFLEX PODIUMS				X	X		
TELEPHONES					X	X	
SERVERS					X	X	
COMPUTERS					X	X	
COMPUTER MONITORS					X	X	
PRINTERS					X	X	
WIRELESS ACCESS POINTS					X	X	
UPS'S					X	X	
TAPE DRIVES					X	X	
SWITCHES					X	X	
INTERIOR INFORMATIONAL MONITORS					X	X	

IT SCHEDULE

SYMBOL	DESCRIPTION	WIRE TYPE	QTY	TYPE	ROUTE TO	CONDUIT	REMARKS
▼ ▼X ▼	GENERIC DATA LINE (X - # OF DATA LINES)	CAT 6A	1	DATA	SERVER ROOM 146	-	-
CR	DATA LINE FOR POE DOOR LOCK	CAT 6A	1	DATA	SERVER ROOM 146	-	CARD READERS ARE SHOWN ON DRAWINGS FOR INFORMATIONAL PURPOSES. REFER TO SECURITY DRAWINGS FOR EXACT QUANTITIES AND LOCATIONS OF CARD READERS, AS WELL AS WIRING (PROVIDED BY LOW VOLTAGE CONTRACTOR) AND RACEWAY REQUIREMENTS. FOR REFERENCE, CARD READERS ARE INTEGRAL WITH DOOR HARDWARE AND DO NOT REQUIRE A BACK BOX OR CONDUIT TO ABOVE DROP CEILING, UNLESS OTHERWISE NOTED.
DS	DATA LINE FOR DIGITAL SIGNAGE (INFORMATIONAL MONITORS)	CAT 6A	1	DATA	SERVER ROOM 146	-	INSTALL 96" ABOVE FLOOR WITH RJ-45 AND DUPLEX POWER OUTLET.
EN	DATA LINE FOR ENCODERS	CAT 6A	1	DATA	HYFLEX PODIUM IN ROOM SERVED	-	TO BE MOUNTED TO UNDERSIDE OF HYFLEX CAMERA FOR STREAMING SERVICE.
		CAT 6A	1	DATA	SERVER ROOM 146	-	
HM	DATA LINE FOR HYFLEX MONITOR	CAT 6A	1	DATA	HYFLEX PODIUM IN ROOM SERVED	-	INSTALL RECEPTACLES 90" AFF.
		CAT 6A	1	DATA	SERVER ROOM 146	-	
S	HYFLEX SPEAKER	SPKR WIRE	1	SPKR WIRE	HYFLEX PODIUM IN ROOM SERVED	-	HYFLEX SPEAKER CABLING FROM CEILING MOUNTED SPEAKERS TO INSTRUCTOR PODIUM (16SWG SPEAKER WIRE).
HC	DATA LINE FOR HYFLEX CAMERA	CAT 6A	1	DATA	HYFLEX PODIUM IN ROOM SERVED	-	EXCEPT ROOMS 313, 315 & 316 WHICH REQUIRES 1 DATA TO SERVER ROOM & 1 DATA TO HYFLEX PODIUM IN ROOM. COORDINATE MOUNTING HEIGHT WITH WCC PERSONNEL.
M	HYFLEX MIC	CAT 6A	1	DATA	HYFLEX PODIUM IN ROOM SERVED	-	CEILING MOUNT.
PR	DATA LINE FOR PROJECTOR	CAT 6A	3	DATA	HYFLEX PODIUM IN ROOM SERVED	-	CEILING MOUNT.
		CAT 6A	1	DATA	SERVER ROOM 146	-	
PS	PROJECTION SCREEN (ELECTRIC)	POWER	1	POWER	REFER TO PLANS	3/4"	COORDINATE LOCATION WITH SCREEN PROVIDED.
S PS	PROJECTION SCREEN SWITCH	POWER	1	POWER	PROJECTION SCREEN CONTRLLER	3/4"	-
POD	INSTRUCTOR PODIUM	CAT 6A	2	DATA	SERVER ROOM 146	-	DATA LINES FOR HYFLEX MONITOR, ENCODERS, SPEAKER, CAMERA, PROJECTOR AND MIC ARE CONNECTED TO ROOM INSTRUCTOR PODIUM. SEE INDIVIDUAL EQUIPMENT FOR WIRING. PROVIDE FLOOR BOXES FOR DATA LINES AND ELECTRICAL OUTLETS IN BASE OF PODIUM. SEE DETAIL FOR ADDITIONAL INFORMATION.
C	CLOCK	N/A	1	N/A	N/A	-	BATTERY POWERED CLOCK WITH WIRELESS SYNCING. SEE NOTES ON DRAWING E-001. COORDINATE EXACT LOCATION AND MOUNTING HEIGHT WITH ARCHITECT.
PA	PUBLIC ADDRESS SPEAKER	SPKR WIRE	1	SPKR WIRE	SERVER ROOM 146	-	CEILING MOUNT.
PH	DATA LINE OR VOIP PHONE	CAT 6A	1	DATA	SERVER ROOM 146	-	INSTALL 48" ABOVE FLOOR WITH RECESSED PHONE MOUNT RJ-45 FACE PLATE.
BD	DATA LINE FOR BI-DIRECTIONAL CAMERA	CAT 6A	1	DATA	SERVER ROOM 146	-	CEILING MOUNT.
QC	DATA LINE FOR QUAD CAMERA	CAT 6A	1	DATA	SERVER ROOM 146	-	CEILING MOUNT.
WAP	DATA LINE FOR WIRELESS ACCESS POINT	CAT 6A	1	DATA	SERVER ROOM 146	-	CEILING MOUNT.
M	MONITOR DUPLEX RECEPTACLE	POWER	1	POWER	REFER TO PLANS	3/4"	RECEPTACLE MOUNTED AT 90" AFF, UON. 5
U	USB DUPLEX RECEPTACLE	POWER	1	POWER	REFER TO PLANS	3/4"	-

NOTES:

1. ALL DATA LINES MUST BE CATEGORY 6A UNSHIELDED TWISTED PAIR OR BETTER. ALL DATA LINES MUST BE DIRECT RUN BACK TO SERVER ROOM 146, UON WITH NO SPLICE POINTS.
2. ALL CABLING SPECIFICATIONS MUST MEET THE FIBER-COPPER (CAT 6A) REQUIREMENTS. SEE WCC WIRING REQUIREMENTS "GENERAL SPECIFICATIONS FIBER-COPPER (CAT 6A) DOCUMENT".
3. PUBLIC ADDRESS SYSTEM (PA) SHALL BE CAPABLE OF SENDING A MESSAGE SPECIFIC TO A SINGLE SPEAKER OR TO ALL SPEAKERS. SYSTEMS CONTROLS TO BE INSTALLED AT SECURITY STATION.
4. ALL LOW VOLTAGE WIRING CONCEALED IN WALLS TO BE INSTALLED IN CONDUIT. ALL LOW VOLTAGE WIRING ABOVE DROP CEILINGS TO BE INSTALLED IN FREE AIR. PROVIDE SUPPORTS / J-HOOKS AS REQUIRED.
5. ALL DATA AND PA SPEAKER WIRING SHALL BE RUN BACK TO SERVER ROOM 146, UON.
6. ALL LOW VOLTAGE WIRING SHALL SHALL BE INSTALLED IN 3/4"C FOR A SINGLE LOCATION AND 1"C FOR TWO LOCATIONS.
7. FIBER OPTIC CABLE SHALL BE INSTALLED IN 2"C.
8. ALL CONDUITS SHALL BE CLEARLY LABELED AT BOTH ENDS DESIGNATING EQUIPMENT SERVED.
9. ALL PA SPEAKER WIRING SHALL BE INSTALLED IN 1"C, UON.
10. PROVIDE RJ-45 JACKS FOR ALL DATA OUTLETS, UON.
11. REFER TO WCC "INFRASTRUCTURE GUIDELINES FOR CLASSROOM TECHNOLOGY", DATED JUNE 2021 FOR ADDITIONAL INFORMATION.
12. SEE GENERAL NOTES ON DRAWING E-001 FOR BACK BOX AND CONDUIT INFORMATION FOR ALL WALL MOUNTED LOW VOLTAGE OUTLETS, DEVICES, EQUIPMENT, ETC. COORDINATE EXACT BACK BOX SIZE WITH EQUIPMENT FURNISHED.
13. TEST AND LABEL ALL LOW VOLTAGE WIRING AFTER INSTALLATION. TERMINATE AT BOTH ENDS, UON. COORDINATE LABELING SCHEME WITH WCC PERSONNEL.
14. PROVIDE CAT 6A PATCH PANELS AS REQUIRED IN SERVER ROOM, AND TO PUNCH DOWN ALL LOW VOLTAGE CONDUCTORS PROVIDE TO THE ROOM. COORDINATE EXACT LOCATION OF PATCH PANELS WITH WCC PERSONNEL.
15. FOR CAT 6A CABLING ROUTED TO INSTRUCTOR PODIUMS, COIL CABLE IN BASE OF PODIUM. LEAVE ENOUGH SLACK TO REACH TOP OF PODIUM. FINAL TERMINATIONS AT PODIUM EQUIPMENT BY OTHERS.

OLA Consulting Engineers
50 Broadway,
Hawthorne, NY 10532
914.747.2800

8 West 38th Street,
Suite 501
New York, NY 10018
646.849.4110

olace.com

CLIENT

MARX REALTY
8000 MALL WALK
YONKERS, NY 10704

No.	ISSUE OR REVISION	DATE
5	ISSUED FOR CONSTRUCTION	03/16/22
4	REVISED BID DRAWINGS	01/21/22
3	ISSUED FOR BID	12/13/21
2	ISSUED FOR PERMIT	11/11/21
1	ISSUED FOR REVIEW - 50% DWG SET	09/24/21

No use, reproduction or dissemination may be made of this drawing and the concepts set forth without the prior written consent of OLA Consulting Engineers, PC. Copyright © 2022

PROJECT TITLE

WESTCHESTER COMMUNITY COLLEGE
BUILDING 11 THIRD FLOOR
CROSS COUNTY SHOPPING CENTER
YONKERS, NY

DRAWING TITLE

ELECTRICAL IT SCHEDULE

SEAL

SCALE	PROJECT NO.
AS NOTED	NTMC0053.00
DRAWN BY: CT	DRAWING NO.
CHECKED BY: DS	E-300
DATE: 09/24/21	

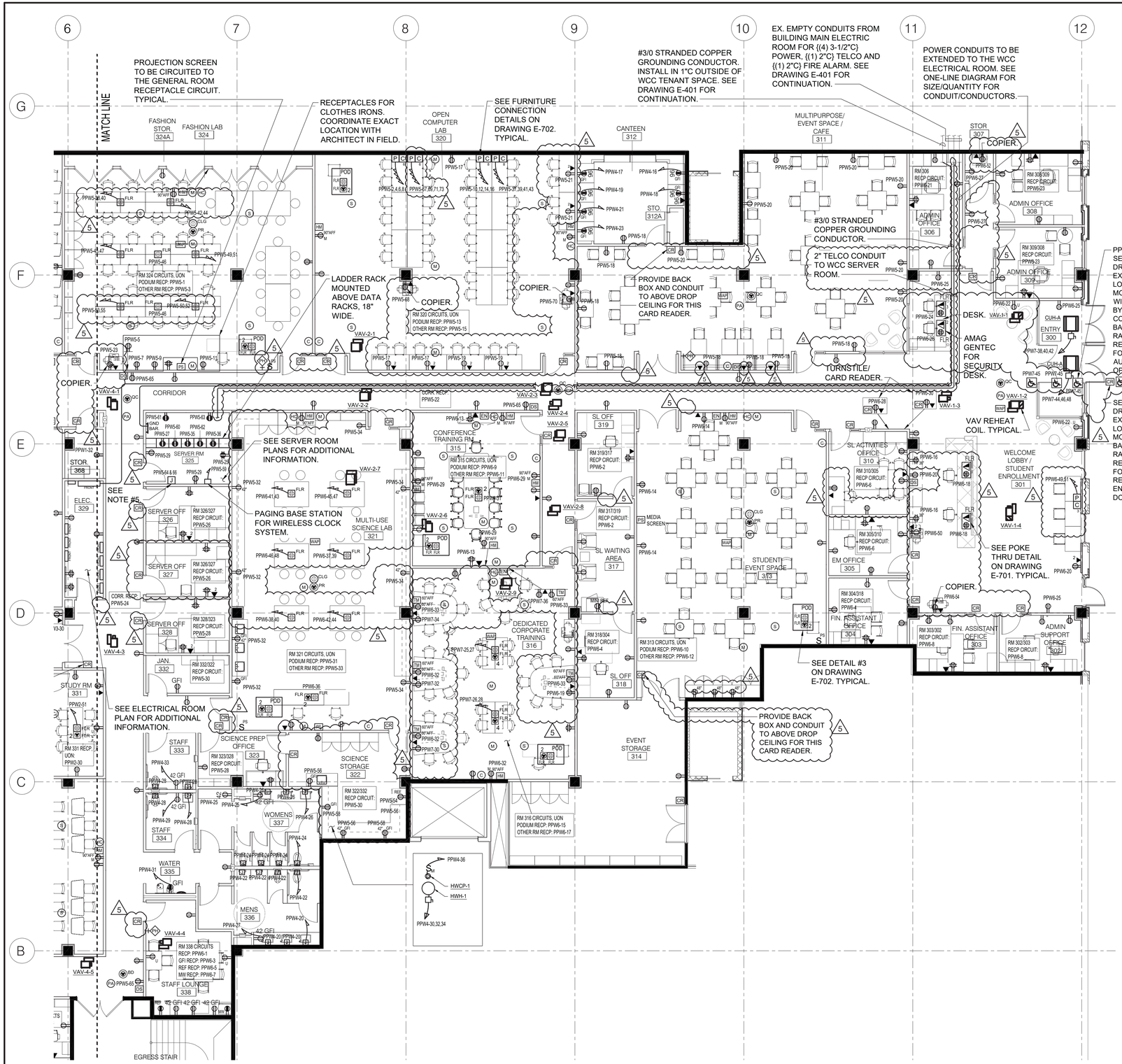

2 ELECTRICAL THIRD FLOOR IT PLAN - SIDE A
SCALE: 1/8" = 1'-0"

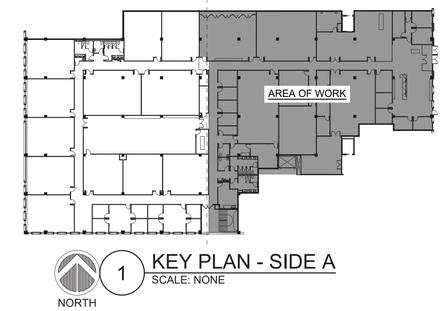

1 KEY PLAN - SIDE A
SCALE: NONE

NOTES:

1. SEE ELECTRICAL ROOM POWER PLAN ON DRAWING E-302 FOR ADDITIONAL INFORMATION.
2. CIRCUIT THE FOLLOWING VAV'S AS INDICATED:
   - VAV-1-1 THRU VAV-1-4, PPW7-13
   - VAV-2-1 THRU VAV-2-5, PPW7-18
   - VAV-2-6 THRU VAV-2-9, PPW7-20
   - VAV-3-1 THRU VAV-3-5, PPW1-31
   - VAV-3-6 THRU VAV-3-10, PPW1-33
   - VAV-4-1 THRU VAV-4-7, PPW7-19
   - VAV-5-1 THRU VAV-5-6, PPW1-34
3. CIRCUIT THE FOLLOWING VAV'S WITH REHEAT COIL AS INDICATED:
   - VAV-1-1, PPW7-14
   - VAV-1-2, PPW7-15,17
   - VAV-1-4, PPW7-16
   - VAV-4-6, PPW7-21,23
   - VAV-4-7, PPW7-22,24
4. COORDINATE EXACT LOCATIONS OF ALL DEVICES WITH ARCHITECT. TYPICAL.
5. PPW5-64 & 66. POWER FOR WALL MOUNTED SECURITY PANEL. COORDINATE EXACT LOCATION WITHIN ROOM IN FIELD.
6. GROUND BAR IN SERVER ROOM TO BE 1/4"x2"x20" PREDRILLED GROUND BAR, MOUNTED ON INSULATORS. COORDINATE EXACT MOUNTING HEIGHT WITH WCC PERSONNEL.

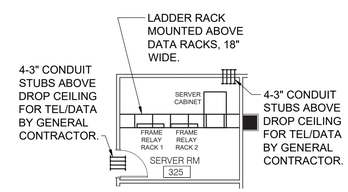

4 ELECTRICAL SERVER ROOM PLAN - SERVER EQUIPMENT
SCALE: 1/8" = 1'-0"

NOTE:

1. EXACT LOCATION OF ALL EQUIPMENT IN SERVER ROOM TO BE COORDINATED WITH WCC PERSONNEL. EQUIPMENT LOCATION TO BE VERIFIED WITH WCC PERSONNEL PRIOR TO INSTALLATION AND PRIOR TO BOLTING RACKS/EQUIPMENT TO FLOOR.

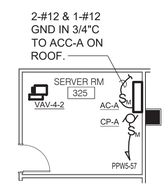

3 ELECTRICAL SERVER ROOM PLAN - MECHANICAL EQUIPMENT
SCALE: 1/8" = 1'-0"

OLA Consulting Engineers
50 Broadway,
Hawthorne, NY 10532
914.747.2800
8 West 38th Street,
Suite 501
New York, NY 10018
646.849.4110
olace.com

CLIENT

MARX REALTY
8000 MALL WALK
YONKERS, NY 10704

No.	ISSUE OR REVISION	DATE
5	ISSUED FOR CONSTRUCTION	03/16/22
4	REVISED BID DRAWINGS	01/21/22
3	ISSUED FOR BID	12/13/21
2	ISSUED FOR PERMIT	11/11/21
1	ISSUED FOR REVIEW - 50% DWG SET	09/24/21

No use, reproduction or dissemination may be made of this drawing and the concepts set forth without the prior written consent of OLA Consulting Engineers, PC. Copyright © 2022

PROJECT TITLE

WESTCHESTER COMMUNITY COLLEGE
BUILDING 11 THIRD FLOOR
CROSS COUNTY SHOPPING CENTER
YONKERS, NY

DRAWING TITLE

ELECTRICAL THIRD FLOOR
IT PLAN - SIDE A

SEAL	SCALE	PROJECT NO.
	AS NOTED	NTMC0053.00
	DRAWN BY: CT	DRAWING NO.
	CHECKED BY: DS	E-301
	DATE: 09/24/21	

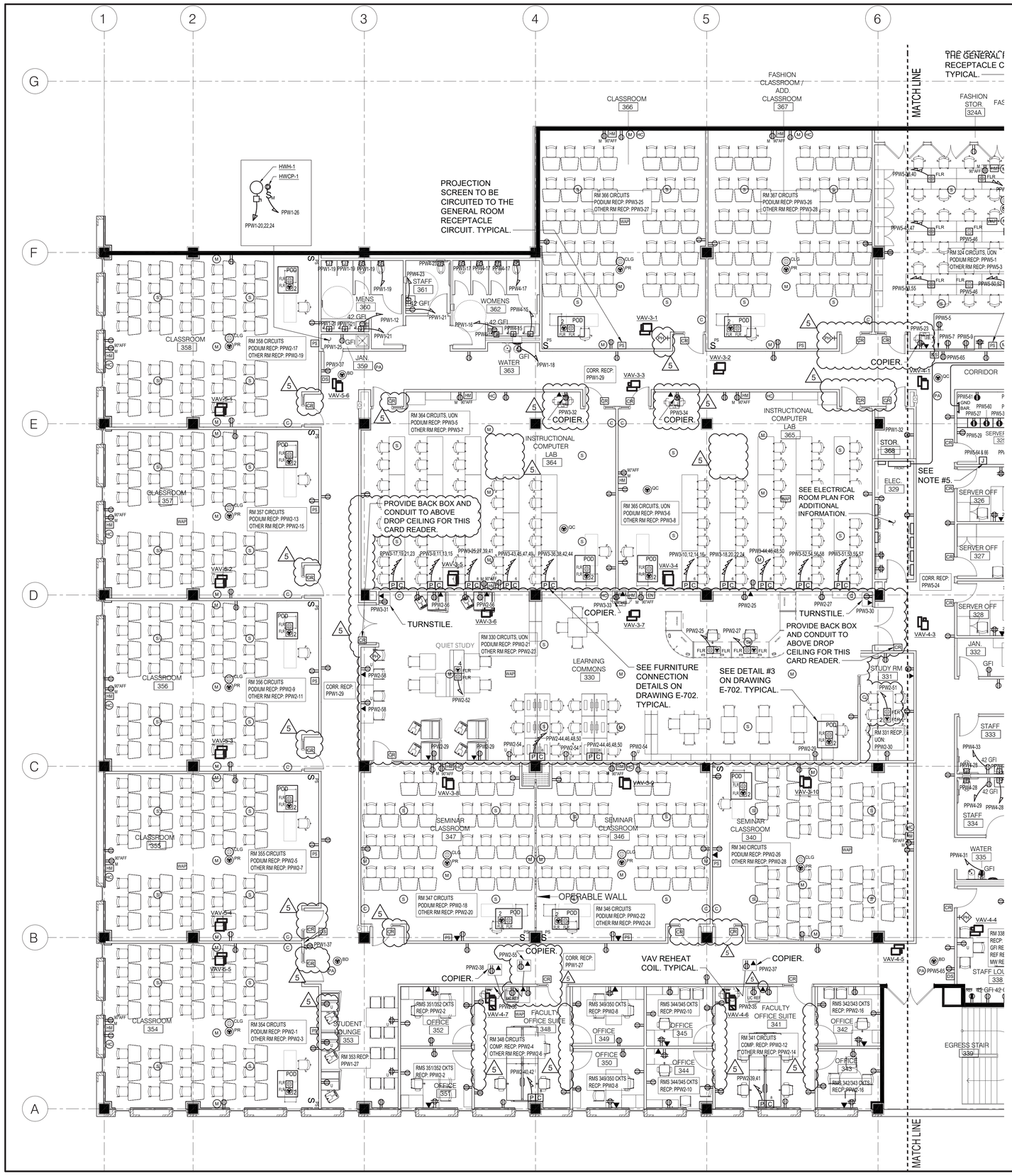

3 ELECTRICAL THIRD FLOOR IT PLAN - SIDE B

SCALE: 1/8" = 1'-0"

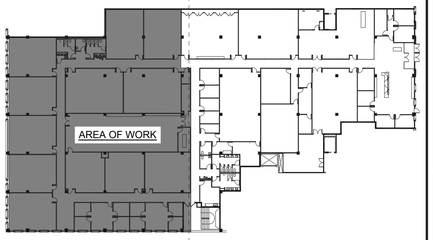

2 KEY PLAN - SIDE B

SCALE: NONE

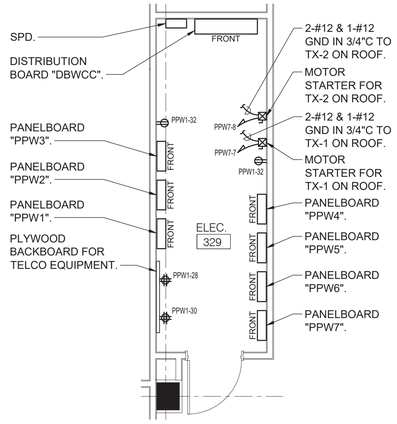

1 ELECTRICAL ROOM POWER PLAN

SCALE: 1/4" = 1'-0"

NOTES:

1. SEE ELECTRICAL ROOM POWER PLAN ON THIS DRAWING FOR ADDITIONAL INFORMATION.
2. CIRCUIT THE FOLLOWING VAV'S AS INDICATED:
   - VAV-1-1 THRU VAV-1-4, PPW7-13
   - VAV-2-1 THRU VAV-2-5, PPW7-18
   - VAV-2-6 THRU VAV-2-9, PPW7-20
   - VAV-3-1 THRU VAV-3-5, PPW1-31
   - VAV-3-6 THRU VAV-3-10, PPW1-33
   - VAV-4-1 THRU VAV-4-7, PPW7-19
   - VAV-5-1 THRU VAV-5-6, PPW1-34
3. CIRCUIT THE FOLLOWING VAV'S WITH REHEAT COIL AS INDICATED:
   - VAV-1-1, PPW7-14
   - VAV-1-2, PPW7-15,17
   - VAV-1-4, PPW7-16
   - VAV-4-6, PPW7-21,23
   - VAV-4-7, PPW7-22,24
4. COORDINATE EXACT LOCATIONS OF ALL DEVICES WITH ARCHITECT. TYPICAL.

OLA Consulting Engineers
50 Broadway,
Hawthorne, NY 10532
914.747.2800
8 West 38th Street,
Suite 501
New York, NY 10018
646.849.4110
olace.com

CLIENT

MARX REALTY
8000 MALL WALK
YONKERS, NY 10704

No.	ISSUE OR REVISION	DATE
5	ISSUED FOR CONSTRUCTION	03/16/22
4	REVISED BID DRAWINGS	01/21/22
3	ISSUED FOR BID	12/13/21
2	ISSUED FOR PERMIT	11/11/21
1	ISSUED FOR REVIEW - 50% DWG SET	09/24/21

No use, reproduction or dissemination may be made of this drawing and the concepts set forth without the prior written consent of OLA Consulting Engineers, PC. Copyright © 2022

PROJECT TITLE

WESTCHESTER COMMUNITY COLLEGE
BUILDING 11 THIRD FLOOR
CROSS COUNTY SHOPPING CENTER
YONKERS, NY

DRAWING TITLE

ELECTRICAL THIRD FLOOR
IT PLAN - SIDE B

SEAL

SCALE	PROJECT NO.
AS NOTED	NTMC0053.00
DRAWN BY: CT	DRAWING NO.
CHECKED BY: DS	E-302
DATE: 09/24/21	

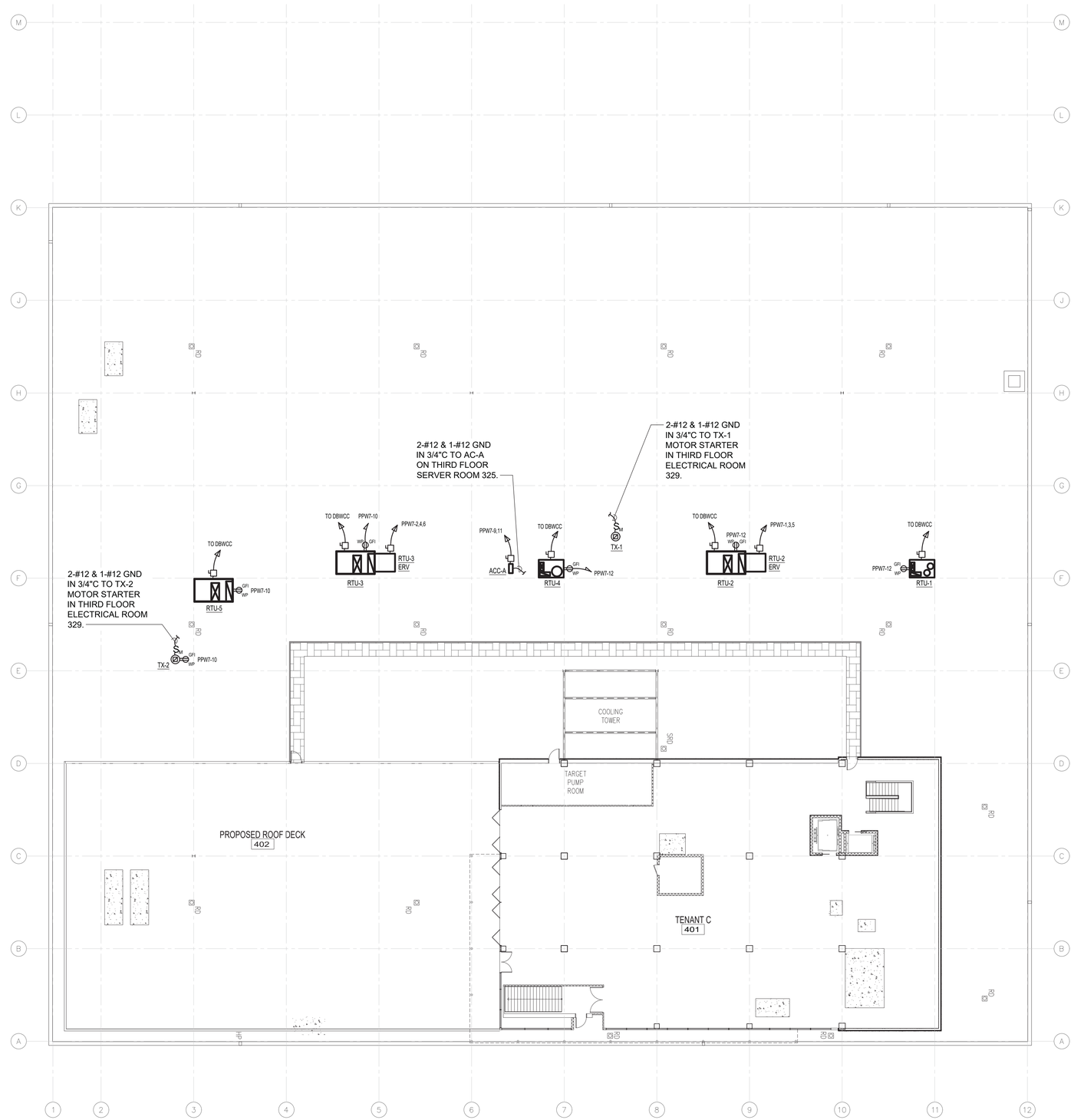

NORTH

1 ELECTRICAL ROOF POWER PLAN
SCALE: 1/16" = 1'-0"

OLA Consulting Engineers
50 Broadway,
Hawthorne, NY 10532
914.747.2800
8 West 38th Street,
Suite 501
New York, NY 10018
646.849.4110
olace.com

CLIENT

MARX REALTY
8000 MALL WALK
YONKERS, NY 10704

No.	ISSUE OR REVISION	DATE
5	ISSUED FOR CONSTRUCTION	03/16/22
4	REVISED BID DRAWINGS	01/21/22
3	ISSUED FOR BID	12/13/21
2	ISSUED FOR PERMIT	11/11/21
1	ISSUED FOR REVIEW - 50% DWG SET	09/24/21

No use, reproduction or dissemination may be made of this drawing and the concepts set forth without the prior written consent of OLA Consulting Engineers, PC. Copyright © 2022

PROJECT TITLE

WESTCHESTER COMMUNITY COLLEGE
BUILDING 11 THIRD FLOOR
CROSS COUNTY SHOPPING CENTER
YONKERS, NY

DRAWING TITLE

ELECTRICAL ROOF POWER PLAN

SEAL

SCALE	AS NOTED
PROJECT NO.	NTMC0053.00
DRAWN BY	CT
DRAWING NO.	E-313
CHECKED BY	DS
DATE	09/24/21

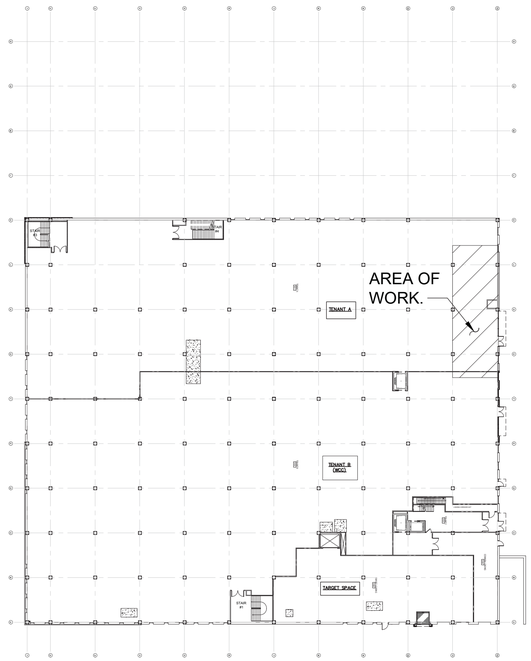

3 KEY PLAN - THIRD FLOOR
SCALE: NONE
NORTH

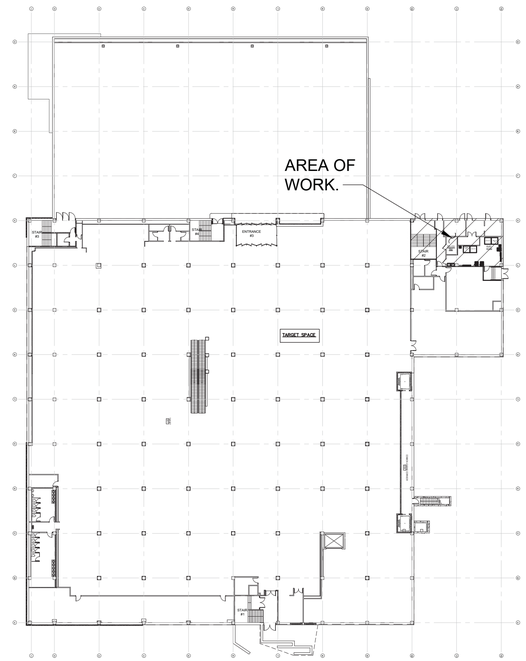

2 KEY PLAN - SECOND FLOOR
SCALE: NONE
NORTH

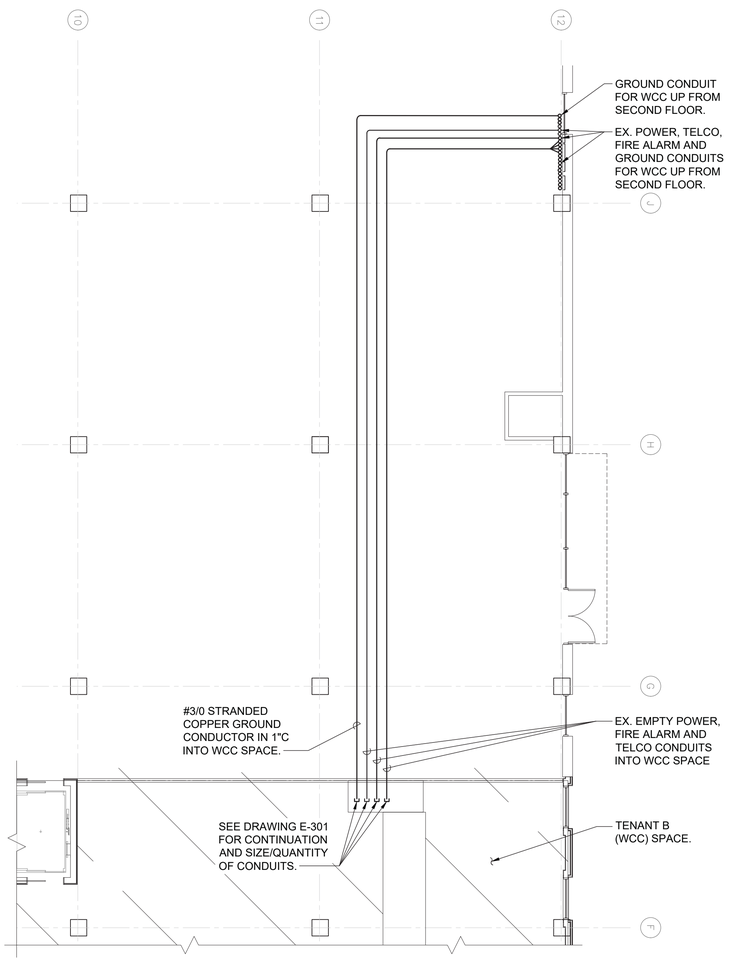

4 ELECTRICAL THIRD FLOOR ROUTING PART PLAN
SCALE: 1/8" = 1'-0"
NORTH

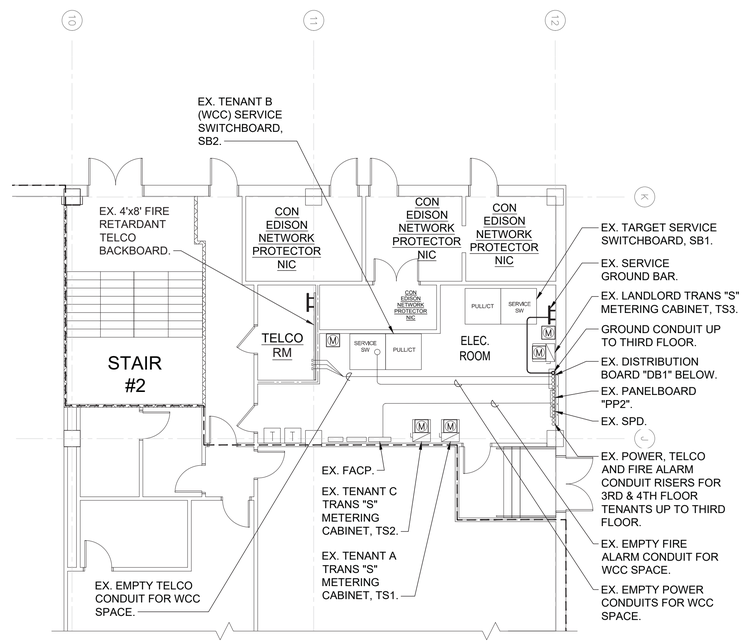

1 ELECTRICAL SECOND FLOOR BUILDING ELECTRICAL ROOM ROUTING PART PLAN
SCALE: 1/8" = 1'-0"
NORTH

OLA Consulting Engineers
50 Broadway,
Hawthorne, NY 10532
914.747.2800
8 West 38th Street,
Suite 501
New York, NY 10018
646.849.4110
olace.com

CLIENT

MARX REALTY
8000 MALL WALK
YONKERS, NY 10704

No.	ISSUE OR REVISION	DATE
5	ISSUED FOR CONSTRUCTION	03/16/22
4	REVISED BID DRAWINGS	01/21/22
3	ISSUED FOR BID	12/13/21
2	ISSUED FOR PERMIT	11/11/21
1	ISSUED FOR REVIEW - 50% DWG SET	09/24/21

No use, reproduction or dissemination may be made of this drawing and the concepts set forth without the prior written consent of OLA Consulting Engineers, PC. Copyright © 2022

PROJECT TITLE

WESTCHESTER COMMUNITY COLLEGE
BUILDING 11 THIRD FLOOR
CROSS COUNTY SHOPPING CENTER
YONKERS, NY

DRAWING TITLE

ELECTRICAL SECOND AND THIRD FLOOR ROUTING PART PLANS

SEAL

SCALE	AS NOTED
PROJECT NO.	NTMC0053.00
DRAWN BY	CT
DRAWING NO.	E-401
CHECKED BY	DS
DATE	09/24/21

NOTES:

1. ALL CIRCUIT BREAKERS AND SWITCHES ARE 3 POLE, U.O.N.
2. DISTRIBUTION BOARD SHALL BE PROVIDED WITH THE FOLLOWING ADDITIONAL SPARE CIRCUIT BREAKERS NOT SHOWN ON ONE-LINE DIAGRAM:
   - A. 4-100A CB
   - B. 2-200A CB
   - C. 1-400A CB
3. SPD SHALL BE ZONE MASTER PRO 240 SERIES ZM15001. MAXIMUM SURGE CURRENT 240kA 208Y/120V OR EQUAL APPROVED.

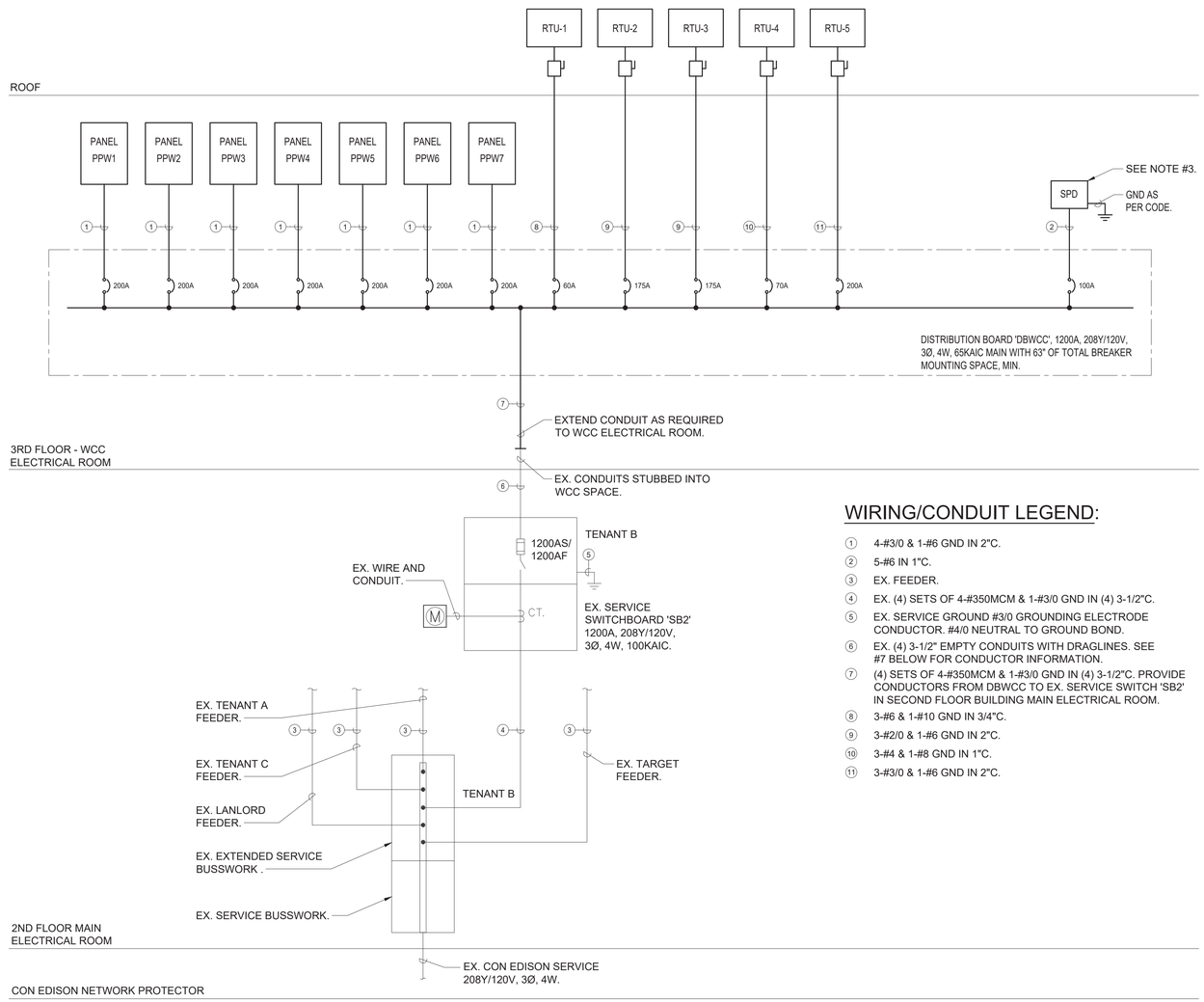

WIRING/CONDUIT LEGEND:

1. 4-#3/0 & 1-#6 GND IN 2"C.
2. 5-#6 IN 1"C.
3. EX. FEEDER.
4. EX. (4) SETS OF 4-#350MCM & 1-#3/0 GND IN (4) 3-1/2"C.
5. EX. SERVICE GROUND #3/0 GROUNDING ELECTRODE CONDUCTOR. #4/0 NEUTRAL TO GROUND BOND.
6. EX. (4) 3-1/2" EMPTY CONDUITS WITH DRAGLINES. SEE #7 BELOW FOR CONDUCTOR INFORMATION.
7. (4) SETS OF 4-#350MCM & 1-#3/0 GND IN (4) 3-1/2"C. PROVIDE CONDUCTORS FROM DBWCC TO EX. SERVICE SWITCH 'SB2' IN SECOND FLOOR BUILDING MAIN ELECTRICAL ROOM.
8. 3-#6 & 1-#10 GND IN 3/4"C.
9. 3-#2/0 & 1-#6 GND IN 2"C.
10. 3-#4 & 1-#8 GND IN 1"C.
11. 3-#3/0 & 1-#6 GND IN 2"C.

1 ELECTRICAL ONE-LINE DIAGRAM
SCALE: NONE

OLA Consulting Engineers
50 Broadway,
Hawthorne, NY 10532
914.747.2800
8 West 38th Street,
Suite 501
New York, NY 10018
646.849.4110
olace.com

CLIENT

MARX REALTY
8000 MALL WALK
YONKERS, NY 10704

No.	ISSUE OR REVISION	DATE
5	ISSUED FOR CONSTRUCTION	03/16/22
4	REVISED BID DRAWINGS	01/21/22
3	ISSUED FOR BID	12/13/21
2	ISSUED FOR PERMIT	11/11/21
1	ISSUED FOR REVIEW - 50% DWG SET	09/24/21

No use, reproduction or dissemination may be made of this drawing and the concepts set forth without the prior written consent of OLA Consulting Engineers, PC. Copyright © 2022

PROJECT TITLE

WESTCHESTER COMMUNITY COLLEGE
BUILDING 11 THIRD FLOOR
CROSS COUNTY SHOPPING CENTER
YONKERS, NY

DRAWING TITLE

ELECTRICAL ONE-LINE DIAGRAM

SEAL

SCALE	PROJECT NO.
AS NOTED	NTMC0053.00
DRAWN BY: CT	DRAWING NO.
CHECKED BY: DS	E-501
DATE: 09/24/21	

LIGHTING SYSTEM FUNCTIONAL TESTING/COMMISSIONING

I. FUNCTIONAL TESTING

PRIOR TO PASSING FINAL INSPECTION, THE CONTRACTOR SHALL PROVIDE EVIDENCE TO THE BUILDING OWNER AND THE ENGINEER THAT THE LIGHTING CONTROL SYSTEMS HAVE BEEN TESTED TO ENSURE THAT CONTROL HARDWARE AND SOFTWARE ARE CALIBRATED, ADJUSTED, PROGRAMMED AND IN PROPER WORKING CONDITION IN ACCORDANCE WITH THE CONSTRUCTION DOCUMENTS AND MANUFACTURER'S DOCUMENTS. FUNCTIONAL TESTING, FOR THE APPLICABLE CONTROL TYPE, SHALL BE IN ACCORDANCE WITH THE FOLLOWING:

1. OCCUPANT SENSOR CONTROLS

WHERE OCCUPANT SENSOR CONTROLS ARE PROVIDED, THE FOLLOWING PROCEDURES SHALL BE PERFORMED:

A. CERTIFY THAT THE OCCUPANT SENSOR HAS BEEN LOCATED AND AIMED IN ACCORDANCE WITH MANUFACTURER RECOMMENDATIONS.
B. FOR PROJECTS WITH SEVEN OF FEWER OCCUPANT SENSORS, EACH SENSOR SHALL BE TESTED.
C. FOR PROJECTS WITH MORE THAN SEVEN OCCUPANT SENSORS, TESTING SHALL BE DONE FOR EACH UNIQUE COMBINATION OF SENSOR TYPE AND SPACE GEOMETRY. WHERE MULTIPLES OF EACH UNIQUE COMBINATION OF SENSOR TYPE AND SPACE GEOMETRY ARE PROVIDED, NOT LESS THAN 10 PERCENT, BUT IN NO CASE LESS THAN ONE, OF EACH COMBINATION SHALL BE TESTED UNLESS THE BUILDING OFFICIAL OR DESIGN PROFESSIONAL REQUIRES A HIGHER PERCENTAGE TO BE TESTED. WHERE 30 PERCENT OR MORE OF THE TESTED CONTROLS FAIL, ALL REMAINING IDENTICAL COMBINATIONS SHALL BE TESTED.

FOR OCCUPANT SENSOR CONTROLS TO BE TESTED, VERIFY THE FOLLOWING:
i. WHERE OCCUPANT SENSOR CONTROLS INCLUDE STATUS INDICATORS, VERIFY CORRECT OPERATION.
ii. THE CONTROLLED LIGHTS TURN OFF OR DOWN TO THE PERMITTED LEVEL WITHIN THE REQUIRED TIME.
iii. FOR AUTO-ON OCCUPANT SENSOR CONTROLS, THE LIGHTS TURN ON TO THE PERMITTED LEVEL WHEN AN OCCUPANT ENTERS THE SPACE.
iv. FOR MANUAL-ON OCCUPANT SENSOR CONTROLS, THE LIGHTS TURN ON ONLY WHEN MANUALLY ACTIVATED.
v. THE LIGHTS ARE NOT INCORRECTLY TURNED ON BY MOVEMENT IN ADJACENT AREAS OR BY HVAC OPERATION.

2. TIME-SWITCH CONTROLS

WHERE TIME-SWITCH CONTROLS ARE PROVIDED, THE FOLLOWING PROCEDURES SHALL BE PERFORMED:

A. CONFIRM THAT THE TIME-SWITCH CONTROL IS PROGRAMMED WITH ACCURATE WEEKDAY, WEEKEND AND HOLIDAY SCHEDULES.
B. PROVIDE DOCUMENTATION TO THE OWNER OF TIME-SWITCH CONTROLS PROGRAMMING INCLUDING WEEKDAY, WEEKEND, HOLIDAY SCHEDULES, AND SET-UP AND PREFERENCE PROGRAM SETTINGS.
C. VERIFY THE CORRECT TIME AND DATE IN THE TIME SWITCH.
D. VERIFY THAT ANY BATTERY BACK-UP IS INSTALLED AND ENERGIZED.
E. VERIFY THAT THE OVERRIDE TIME LIMIT IS SET TO NOT MORE THAN 2 HOURS.
F. SIMULATE OCCUPIED CONDITION. VERIFY AND DOCUMENT THE FOLLOWING:
i. ALL LIGHTS CAN BE TURNED ON AND OFF BY THEIR RESPECTIVE AREA CONTROL SWITCH.
ii. THE SWITCH ONLY OPERATES LIGHTING IN THE ENCLOSED SPACE IN WHICH THE SWITCH IS LOCATED.
G. SIMULATE UNOCCUPIED CONDITION. VERIFY AND DOCUMENT THE FOLLOWING:
i. NONEXEMPT LIGHTING TURNS OFF.
ii. MANUAL OVERRIDE SWITCH ALLOWS ONLY THE LIGHTS IN THE ENCLOSED SPACE WHERE THE OVERRIDE SWITCH IS LOCATED TO TURN ON OR REMAIN ON UNTIL THE NEXT SCHEDULED SHUTOFF OCCURS.

3. DAYLIGHT RESPONSIVE CONTROLS

WHERE DAYLIGHT RESPONSIVE CONTROLS ARE PROVIDED, THE FOLLOWING SHALL BE VERIFIED:

A. CONTROL DEVICES HAVE BEEN PROPERLY LOCATED, FIELD CALIBRATED AND SET FOR ACCURATE SET POINTS AND THRESHOLD LIGHT LEVELS.
B. DAYLIGHT CONTROLLED LIGHTING LOADS ADJUST TO LIGHT LEVEL SET POINTS IN RESPONSE TO AVAILABLE DAYLIGHT.
C. THE CALIBRATION ADJUSTMENT EQUIPMENT IS LOCATED FOR READILY ACCESS ONLY BY AUTHORIZED PERSONNEL.

II. DOCUMENTATION REQUIREMENTS

THE DOCUMENTS DESCRIBED IN THIS SECTION SHALL BE PROVIDED TO THE BUILDING OWNER OR OWNER'S AUTHORIZED AGENT WITHIN 60 DAYS OF THE DATE OF RECEIPT OF THE CERTIFICATE OF OCCUPANCY.

A. DRAWINGS:
i. AS-BUILT CONSTRUCTION DOCUMENTS, SHOWING THE LOCATION AND CATALOG NUMBER OF EACH PIECE OF EQUIPMENT.
B. MANUALS: AN OPERATING AND MAINTENANCE MANUAL SHALL BE PROVIDED AND INCLUDE THE FOLLOWING:
i. NAME AND ADDRESS OF NOT LESS THAN ONE SERVICE AGENCY FOR INSTALLED EQUIPMENT.
ii. A NARRATIVE OF HOW EACH SYSTEM IS INTENDED TO OPERATE, INCLUDING RECOMMENDED SET POINTS.
iii. SUBMITTAL DATA INDICATING ALL SELECTED OPTIONS FOR EACH PIECE OF LIGHTING EQUIPMENT AND LIGHTING CONTROLS.
iv. OPERATION AND MAINTENANCE MANUALS FOR EACH PIECE OF LIGHTING EQUIPMENT. REQUIRED ROUTINE MAINTENANCE ACTIONS, CLEANING AND RECOMMENDED RELAMPING SHALL BE CLEARLY IDENTIFIED.
v. A SCHEDULE FOR INSPECTING AND RECALIBRATING ALL LIGHTING CONTROLS.
C. REPORT: A REPORT OF TEST RESULTS SHALL BE PROVIDED AND INCLUDE THE FOLLOWING.
i. RESULTS OF FUNCTIONAL PERFORMANCE TESTS.
ii. DISPOSITION OF DEFICIENCIES FOUND DURING TESTING, INCLUDING DETAILS OF CORRECTIVE MEASURES USED OR PROPOSED.

LIGHTING FIXTURE SCHEDULE

FIXTURE DESIGNATION	MANUFACTURER	CATALOG NUMBER	LAMPS	VOLTS	MOUNTING	REMARKS
L1	HUBBELL LIGHTING	LCAT22-9-35-XX-G -X-X-ED-U-ELL14-X	(1) 30W LED	120V	RECESSED	2'x2' LED RECESSED TROFFER DIMMABLE LIGHT FIXTURE. PROVIDE EM OPTION FOR 90 MINUTES OF BATTERY BACKUP, MINIMUM WHERE INDICATED ON PLAN.
L2	PRESCOLITE LIGHTING	LTR-4RD-H-SL-10L -DM1_LTR-4-RD-T -SL35K8WD-S	(1) 12W LED	120V	RECESSED	4" ROUND LED DIMMABLE DOWNLIGHT FIXTURE.
L3	XAL LIGHTING	BASO 2.5-PDT-WH-OP -35K-C90-UNV-010V -0550LF-EM#-ST-48IN	(1) 19W LED	120V	PENDANT	4'-0" LED PENDANT DIMMABLE LIGHT FIXTURE. PROVIDE EM OPTION FOR 90 MINUTES OF BATTERY BACKUP, MINIMUM WHERE INDICATED ON PLAN.
L4	XAL LIGHTING	BASO 2.5-PDT-WH-OP -35K-C90-UNV-010V -0550LF-EM#-ST-96IN	(1) 38W LED	120V	PENDANT	8'-0" LED PENDANT DIMMABLE LIGHT FIXTURE. PROVIDE EM OPTION FOR 90 MINUTES OF BATTERY BACKUP, MINIMUM WHERE INDICATED ON PLAN.
L5	XAL LIGHTING	VELA-DIR-RD-PDT-WH -OP-35K-C90-UNV-010V -XXXXL-EM1-DM-2FT	(1) 27W LED	120V	PENDANT	2FT ROUND LED PENDANT DIMMABLE LIGHT FIXTURE. PROVIDE EM OPTION FOR 90 MINUTES OF BATTERY BACKUP, MINIMUM WHERE INDICATED ON PLAN.
L6	XAL LIGHTING	BASO 2.5-PM-WH-OP -35K-C90-UNV-010V -0455LF-EM#-ST-48IN	(1) 19W/4FT LED	120V	PENDANT	4'-0" LED PENDANT DIMMABLE LIGHT FIXTURE. PROVIDE EM OPTION FOR 90 MINUTES OF BATTERY BACKUP, MINIMUM WHERE INDICATED ON PLAN.
L7	XAL LIGHTING	BASO 2.5-PDT-OP-35K -0550LF-EM-8F-T/4FT	(1) 38W LED	120V	PENDANT	LED LINEAR DIMMABLE LIGHT FIXTURE. PROVIDE EM OPTION FOR 90 MINUTES OF BATTERY BACKUP, MINIMUM WHERE INDICATED ON PLAN.
L8	MERCURY LIGHTING	LW3-WM-4-8000-35K -AW-1%-UNI-WMB	(1) 64W LED	120V	PENDANT	4'-0" WALL MOUNTED LINEAR DIMMABLE LIGHT FIXTURE.
L9	MERCURY LIGHTING	LW3-8-8000-35K -AW-1%-UNI	(1) 66W LED	120V	PENDANT	8'-0" LED PENDANT DIMMABLE LIGHT FIXTURE. PROVIDE EM OPTION FOR 90 MINUTES OF BATTERY BACKUP, MINIMUM WHERE INDICATED ON PLAN.
	TBD	TBD	LED	120V	SURFACE/ RECESSED	LED EXIT SIGN WITH 90 MINUTES OF BATTERY BACKUP TIME, MIN., UNIVERSAL MOUNTING, RED LETTERS ON WHITE BACKGROUND. PROVIDE CHEVRONS AS INDICATED ON DRAWINGS.

5

NOTES:

1.) VERIFY ALL FIXTURE CATALOG NUMBERS FOR INTENDED APPLICATIONS WITH REQUIRED ACCESSORIES.
2.) ALL BALLASTS AND DRIVERS IN FIXTURES LOCATED OUTDOORS SHALL BE ZERO DEGREE RATED STARTING TEMPERATURE. REFER TO DRAWINGS FOR LOCATION OF FIXTURES.
3.) LIGHT FIXTURES INDICATED AS EMERGENCY (EM) ON DRAWINGS SHALL CONTAIN AN EMERGENCY BACK-UP BATTERY WHERE POSSIBLE THE SHALL BE INTERNAL TO FIXTURE WITH A VISUAL INDICATING CHARGE LAMP AND TEST SWITCH. IF IT IS NOT POSSIBLE TO INSTALL THE EMERGENCY BATTERY IN THE FIXTURE, THE CONTRACTOR SHALL FURNISH & INSTALL A REMOTE EMERGENCY BATTERY. EACH BATTERY PACK SHALL BE CONNECTED SO THAT THE FIXTURE CAN BE SWITCHED UNDER NORMAL CONDITIONS AND IN THE EVENT OF A POWER OUTAGE, THE FIXTURE SHALL AUTOMATICALLY ILLUMINATE FOR 90 MINUTES WITH A 1200 LUMEN OUTPUT (TOTAL FROM FIXTURE), MINIMUM.
4.) ALL EXIT AND EMERGENCY FIXTURES SHALL BE FED FROM UNSWITCHED LEG OF ASSOCIATED LOCAL LIGHTING CIRCUITS.
5.) IN THE EVENT THE CONTRACTOR CHOOSES TO SUBSTITUTE LIGHT FIXTURES FOR THOSE THAT ARE SPECIFIED ON THE LIGHT FIXTURE SCHEDULE, THE CONTRACTOR SHALL SUBMIT POINT-TO-POINT PHOTOMETRIC CALCULATIONS FOR ALL AREAS WHERE THE SUBSTITUTED FIXTURES ARE INDICATED TO BE INSTALLED ON THE DRAWINGS. THESE CALCULATIONS SHALL BE SUBMITTED ALONG WITH THE LIGHT FIXTURE SHOP DRAWINGS.

PPW1 PANEL SCHEDULE

MAIN RATING: 225A MAIN C.B.: MLO KAIC RATING: 22KAIC

VOLTAGE: 208Y/120V PHASE: 3 WIRE: 4 MOUNTING: SURFACE

CIRC. NO.	LOAD DESCRIPTION	BKR. AMPS	NO. OF POLES	NO. OF POLES	BKR. AMPS	LOAD DESCRIPTION	CIRC. NO.
1	LTG - RMS 356/357/358	20	1	1	20	LTG - RM 359/360	2
3	LTG - RM 361	20	1	1	20	LTG - RM 362	4
5	LTG - CORRIDOR	20	1	1	20	LTG - CORRIDOR	6
7	LTG - RM 354/355	20	1	1	20	LTG - RM 341/342/343/344/345/348/349/350/351/352	8
9	LTG - RM 346/347/340	20	1	1	20	LTG - RM 330	10
11	LTG - RM 366/367	20	1	1	20	REC - RM 360	12
13	LTG - RM 364/365	20	1	1	20	LTG - RM 329	14
15	JBOX - RM 362	20	1	1	20	REC - RM 362	16
17	JBOX - RM 362	20	1	1	20	REC - WATER FOUNTAIN	18
19	JBOX - RM 360	20	1	3	15	HWH-1	20
21	JBOX - RM 360	20	1				22
23	JBOX - RM 361	20	1				24
25	RECP RM 359	20	1	1	15	HWCP-1	26
27	RECP CORR/353	20	1	1	20	RECP 329	28
29	RECP CORR	20	1	1	20	RECP 329	30
31	VAV-3-1 THRU VAV-3-5	20	1	1	20	RECP 329/364	32
33	VAV-3-6 THRU VAV-3-10	20	1	1	20	VAV-5-1 THRU VAV-5-6	34
35	FA BOOSTER POWER SUPPLY	20LK	1	1	20LK	FA BOOSTER POWER SUPPLY	36
37	RECP DISPLAY SCREENS CORR	20	1	1	20	SPARE	38
39	SPARE	20	1	1	20	SPARE	40
41	SPARE	20	1	1	20	SPARE	42

LK - PROVIDE LOCKING TABS ON C.B.; GF - GFI TYPE C.B.; GP - GFP TYPE C.B.;
AF - ARC FAULT TYPE C.B.; ST - SHUNT TRIP C.B.

NOTES:

OLA Consulting Engineers
50 Broadway,
Hawthorne, NY 10532
914.747.2800

8 West 38th Street,
Suite 501
New York, NY 10018
646.849.4110

olace.com

CLIENT

MARX REALTY
8000 MALL WALK
YONKERS, NY 10704

No.	ISSUE OR REVISION	DATE
5	ISSUED FOR CONSTRUCTION	03/16/22
4	REVISED BID DRAWINGS	01/21/22
3	ISSUED FOR BID	12/13/21
2	ISSUED FOR PERMIT	11/11/21
1	ISSUED FOR REVIEW - 50% DWG SET	09/24/21

No use, reproduction or dissemination may be made of this drawing and the concepts set forth without the prior written consent of OLA Consulting Engineers, PC. Copyright © 2022

PROJECT TITLE

WESTCHESTER COMMUNITY COLLEGE
BUILDING 11 THIRD FLOOR
CROSS COUNTY SHOPPING CENTER
YONKERS, NY

DRAWING TITLE

ELECTRICAL SCHEDULE AND NOTES

SEAL

SCALE: AS NOTED
PROJECT NO.: NTMC0053.00
DRAWN BY: CT
DRAWING NO.: E-601
CHECKED BY: DS
DATE: 09/24/21

PPW2 PANEL SCHEDULE

MAIN RATING: 225A MAIN C.B.: MLO KAIC RATING: 22KAIC

VOLTAGE: 208Y/120V PHASE: 3 WIRE: 4 MOUNTING:

CIRC. NO.	LOAD DESCRIPTION	BKR. AMPS	NO. OF POLES	NO. OF POLES	BKR. AMPS	LOAD DESCRIPTION	CIRC. NO.
1	RECP RM 354	20	1	1	20	RECP RM 351/352	2
3	RECP RM 354	20	1	1	20	RECP RM 348	4
5	RECP RM 355	20	1	1	20	RECP RM 348	6
7	RECP RM 355	20	1	1	20	RECP RM 349/350	8
9	RECP RM 356	20	1	1	20	RECP RM 344/345	10
11	RECP RM 356	20	1	1	20	RECP RM 341	12
13	RECP RM 357	20	1	1	20	RECP RM 341	14
15	RECP RM 357	20	1	1	20	RECP RM 342/343	16
17	RECP RM 358	20	1	1	20	RECP RM 347	18
19	RECP RM 358	20	1	1	20	RECP RM 347	20
21	RECP RM 330	20	1	1	20	RECP RM 346	22
23	RECP RM 330	20	1	1	20	RECP RM 346	24
25	RECP RM 330	20	1	1	20	RECP RM 340	26
27	RECP RM 330	20	1	1	20	RECP RM 340	28
29	RECP RM 330	20	1	1	20	RECP RM 331	30
31	HVAC CONTROL PANEL	20	1	1	20	HVAC CONTROL PANEL	32
33	HVAC CONTROL PANEL	20	1	1	20	HVAC CONTROL PANEL	34
35	RECP UC REF 341	20	1	1	20	RECP UC REF 348	36
37	RECP COPIER 341	20	1	1	20	RECP COPIER 348	38
39	FURN FEED POWER 341	20	1	1	20	FURN FEED POWER 348	40
41	FURN FEED POWER 341	20	1	1	20	FURN FEED POWER 348	42
43	SPARE	20	1	1	20	FURN FEED POWER 330	44
45	SPARE	20	1	1	20	FURN FEED POWER 330	46
47	SPARE	20	1	1	20	FURN FEED POWER 330	48
49	SPARE	20	1	1	20	FURN FEED POWER 330	50
51	RECP FLOOR 331	20	1	1	20	RECP 330	52
53	SPARE	20	1	1	20	RECP 330	54
55	RECP COPIER	20	1	1	20	RECP 330	56
57	-	-	-	1	20	RECP 330	58
59	-	-	-	-	-	-	60
61	-	-	-	-	-	-	62
63	-	-	-	-	-	-	64
65	-	-	-	-	-	-	66
67	-	-	-	-	-	-	68
69	-	-	-	-	-	-	70
71	-	-	-	-	-	-	72
73	-	-	-	-	-	-	74
75	-	-	-	-	-	-	76
77	SPARE	20	1	1	20	SPARE	78
79	SPARE	20	1	1	20	SPARE	80
81	SPARE	20	1	1	20	SPARE	82
83	SPARE	20	1	1	20	SPARE	84

LK - PROVIDE LOCKING TABS ON C.B.; GF - GFI TYPE C.B.; GP - GFP TYPE C.B.;
AF - ARC FAULT TYPE C.B.; ST - SHUNT TRIP C.B.

NOTES:

PPW3 PANEL SCHEDULE

MAIN RATING: 225A MAIN C.B.: MLO KAIC RATING: 22KAIC

VOLTAGE: 208Y/120V PHASE: 3 WIRE: 4 MOUNTING: SURFACE

CIRC. NO.	LOAD DESCRIPTION	BKR. AMPS	NO. OF POLES	NO. OF POLES	BKR. AMPS	LOAD DESCRIPTION	CIRC. NO.
1	SPARE	20	1	1	20	SPARE	2
3	SPARE	20	1	1	20	SPARE	4
5	RECP RM 364	20	1	1	20	RECP RM 365	6
7	RECP RM 364	20	1	1	20	RECP RM 365	8
9	RECP RM 364	20	1	1	20	RECP RM 365	10
11	RECP RM 364	20	1	1	20	RECP RM 365	12
13	RECP RM 364	20	1	1	20	RECP RM 365	14
15	RECP RM 364	20	1	1	20	RECP RM 365	16
17	RECP RM 364	20	1	1	20	RECP RM 365	18
19	RECP RM 364	20	1	1	20	RECP RM 365	20
21	RECP RM 364	20	1	1	20	RECP RM 365	22
23	RECP RM 364	20	1	1	20	RECP RM 365	24
25	RECP RM 366	20	1	1	20	RECP RM 367	26
27	RECP RM 366	20	1	1	20	RECP RM 367	28
29	RECP RM 330	20	1	1	20	RECP RM 330 TURNSTILE	30
31	RECP RM 330 TURNSTILE	20	1	1	20	RECP COPIER 364	32
33	RECP COPIER 330	20	1	1	20	RECP COPIER 365	34
35	FURN FEED POWER 364	20	1	1	20	FURN FEED POWER 364	36
37	FURN FEED POWER 364	20	1	1	20	FURN FEED POWER 364	38
39	FURN FEED POWER 364	20	1	1	20	FURN FEED POWER 364	40
41	FURN FEED POWER 364	20	1	1	20	FURN FEED POWER 364	42
43	FURN FEED POWER 364	20	1	1	20	FURN FEED POWER 365	44
45	FURN FEED POWER 364	20	1	1	20	FURN FEED POWER 365	46
47	FURN FEED POWER 364	20	1	1	20	FURN FEED POWER 365	48
49	FURN FEED POWER 364	20	1	1	20	FURN FEED POWER 365	50
51	FURN FEED POWER 365	20	1	1	20	FURN FEED POWER 365	52
53	FURN FEED POWER 365	20	1	1	20	FURN FEED POWER 365	54
55	FURN FEED POWER 365	20	1	1	20	FURN FEED POWER 365	56
57	FURN FEED POWER 365	20	1	1	20	FURN FEED POWER 365	58
59	-	-	-	-	-	-	60
61	-	-	-	-	-	-	62
63	-	-	-	-	-	-	64
65	-	-	-	-	-	-	66
67	-	-	-	-	-	-	68
69	-	-	-	-	-	-	70
71	-	-	-	-	-	-	72
73	-	-	-	-	-	-	74
75	-	-	-	-	-	-	76
77	SPARE	20	1	1	20	SPARE	78
79	SPARE	20	1	1	20	SPARE	80
81	SPARE	20	1	1	20	SPARE	82
83	SPARE	20	1	1	20	SPARE	84

LK - PROVIDE LOCKING TABS ON C.B.; GF - GFI TYPE C.B.; GP - GFP TYPE C.B.;
AF - ARC FAULT TYPE C.B.; ST - SHUNT TRIP C.B.

NOTES:

PPW4 PANEL SCHEDULE

MAIN RATING: 225A MAIN C.B.: MLO KAIC RATING: 22KAIC

VOLTAGE: 208Y/120V PHASE: 3 WIRE: 4 MOUNTING: SURFACE

CIRC. NO.	LOAD DESCRIPTION	BKR. AMPS	NO. OF POLES	NO. OF POLES	BKR. AMPS	LOAD DESCRIPTION	CIRC. NO.
1	LTG - RM 324/324A	20	1	1	20	LTG - RM 312/312A	2
3	LTG - RM 320	20	1	1	20	LTG - RM 311	4
5	LTG - RM 307/308/309	20	1	1	20	LTG RM 300	6
7	LTG - RM 302/303/304/305/310	20	1	1	20	LTG - RM 313/317/319	8
9	LTG - RM 314/318	20	1	1	20	LTG - RM 315/316	10
11	LTG - RM 333/334//323/337/322	20	1	1	20	LTG - RM 336/338	12
13	LTG - CORRIDOR	20	1	1	20	LTG - CORRIDOR	14
15	LTG - 332/328/327/326/325/321	20	1	1	20	REC - VENDING MACHINE RM 312	16
17	REC - VENDING MACHINE RM 312	20	1	1	20	REC - VENDING MACHINE RM 312	18
19	REC - VENDING MACHINE RM 312	20	1	1	20	JBOX - RM 336	20
21	REC - VENDING MACHINE RM 312	20	1	1	20	JBOX - RM 336	22
23	REC - VENDING MACHINE RM 312	20	1	1	20	JBOX - RM 337	24
25	REC - RM 337	20	1	1	20	JBOX - RM 337	26
27	REC - RM 336	20	1	1	20	JBOX - RM 333/334	28
29	REC - RM 334	20	1				30
31	REC - WATER FOUNTAIN	20	1	3	15	HWH-1	32
33	REC - RM 333	20	1				34
35	SPARE	20	1	1	15	HWCP-1	36
37	SPARE	20	1	1	20	SPARE	38
39	SPARE	20	1	1	20	SPARE	40
41	SPARE	20	1	1	20	SPARE	42

LK - PROVIDE LOCKING TABS ON C.B.; GF - GFI TYPE C.B.; GP - GFP TYPE C.B.;
AF - ARC FAULT TYPE C.B.; ST - SHUNT TRIP C.B.

NOTES:

OLA Consulting Engineers

50 Broadway,
Hawthorne, NY 10532
914.747.2800

8 West 38th Street,
Suite 501
New York, NY 10018
646.849.4110

olace.com

CLIENT

MARX REALTY
8000 MALL WALK
YONKERS, NY 10704

No.	ISSUE OR REVISION	DATE
5	ISSUED FOR CONSTRUCTION	03/16/22
4	REVISED BID DRAWINGS	01/21/22
3	ISSUED FOR BID	12/13/21
2	ISSUED FOR PERMIT	11/11/21
1	ISSUED FOR REVIEW - 50% DWG SET	09/24/21

No use, reproduction or dissemination may be made of this drawing and the concepts set forth without the prior written consent of OLA Consulting Engineers, PC. Copyright © 2022

PROJECT TITLE

WESTCHESTER COMMUNITY COLLEGE
BUILDING 11 THIRD FLOOR
CROSS COUNTY SHOPPING CENTER
YONKERS, NY

DRAWING TITLE

ELECTRICAL
SCHEDULES

SEAL

SCALE: AS NOTED
PROJECT NO.: NTMC0053.00
DRAWN BY: CT
DRAWING NO.: E-602
CHECKED BY: DS
DATE: 09/24/21

PPW5 PANEL SCHEDULE

MAIN RATING: 225A MAIN C.B.: MLO KAIC RATING: 22KAIC

VOLTAGE: 208Y/120V PHASE: 3 WIRE: 4 MOUNTING: SURFACE

CIRC. NO.	LOAD DESCRIPTION	BKR. AMPS	NO. OF POLES	NO. OF POLES	BKR. AMPS	LOAD DESCRIPTION	CIRC. NO.
1	RECP RM 324	20	1	1	20	FURN FEED POWER 320	2
3	RECP RM 324	20	1	1	20	FURN FEED POWER 320	4
5	RECP RM 324	20	1	1	20	FURN FEED POWER 320	6
7	RECP RM 324	20	1	1	20	FURN FEED POWER 320	8
9	RECP RM 324	20	1	1	20	FURN FEED POWER 320	10
11	RECP RM 324	20	1	1	20	FURN FEED POWER 320	12
13	RECP RM 320	20	1	1	20	FURN FEED POWER 320	14
15	RECP RM 320	20	1	1	20	FURN FEED POWER 320	16
17	RECP RM 320	20	1	1	20	RECP RM 311/312	18
19	RECP RM 320	20	1	1	20	RECP RM 311	20
21	RECP RM 320	20	1	1	20	RECP CORR	22
23	RECP COPIER 324	20	1	1	20	RECP CORR	24
25	RECP RM 325	20	1	1	20	RECP RM 326/327	26
27	RECP RM 325	20	1	1	20	RECP RM 323/328	28
29	RECP RM 325	20	1	1	20	RECP RM 322/332	30
31	RECP RM 321	20	1	1	20	RECP RM 331	32
33	RECP RM 321	20	1	1	20	RECP RM 331	34
35	RECP RM 325	20	1	1	20	RECP RM 325	36
37	FURN FEED POWER 320	20	1	1	20	RECP QUAD 324	38
39	FURN FEED POWER 320	20	1	1	20	RECP QUAD 324	40
41	FURN FEED POWER 320	20	1	1	20	RECP QUAD 324	42
43	FURN FEED POWER 320	20	1	1	20	RECP QUAD 324	44
45	RECP QUAD 324	20	1	1	20	RECP 324	46
47	RECP QUAD 324	20	1	1	20	RECP 324	48
49	RECP QUAD 324	20	1	1	20	RECP QUAD 324	50
51	RECP QUAD 324	20	1	1	20	RECP QUAD 324	52
53	RECP QUAD 324	20	1	1	20	RECP REF 322	54
55	RECP QUAD 324	20	1	1	20	RECP 322	56
57	CP-A 325	15	1	1	20	RECP 322	58
59	PAGING BASE STATION	20	1	1	20	LADDER RACK RECP RM 325	60
61	RECP WALL RM 325	20	1	1	20	LADDER RACK RECP RM 325	62
63	RECP WALL RM 325	20	1	1	20	WALL MTD SECURITY PANEL	64
65	RECP DISPLAY SCREENS CORR	20	1	1	20	WALL MTD SECURITY PANEL	66
67	FURN FEED POWER 320	20	1	1	20	RECP COPIER 320	68
69	FURN FEED POWER 320	20	1	1	20	RECP COPIER 320	70
71	FURN FEED POWER 320	20	1	-	-	-	72
73	FURN FEED POWER 320	20	1	-	-	-	74
75	-	-	-	-	-	-	76
77	SPARE	20	1	1	20	SPARE	78
79	SPARE	20	1	1	20	SPARE	80
81	SPARE	20	1	1	20	SPARE	82
83	SPARE	20	1	1	20	SPARE	84

LK - PROVIDE LOCKING TABS ON C.B.; GF - GFI TYPE C.B.; GP - GFP TYPE C.B.;
AF - ARC FAULT TYPE C.B.; ST - SHUNT TRIP C.B.

NOTES:

PPW6 PANEL SCHEDULE

MAIN RATING: 225A MAIN C.B.: MLO KAIC RATING: 22KAIC

VOLTAGE: 208Y/120V PHASE: 3 WIRE: 4 MOUNTING: SURFACE

CIRC. NO.	LOAD DESCRIPTION	BKR. AMPS	NO. OF POLES	NO. OF POLES	BKR. AMPS	LOAD DESCRIPTION	CIRC. NO.
1	RECP RM 338	20	1	1	20	RECP RM 317/319	2
3	RECP RM 338	20	1	1	20	RECP RM 304/318	4
5	RECP RM 338	20	1	1	20	RECP RM 305/310	6
7	RECP RM 338	20	1	1	20	RECP RM 302/303	8
9	RECP RM 315	20	1	1	20	RECP RM 313	10
11	RECP RM 315	20	1	1	20	RECP RM 313	12
13	RECP RM 315	20	1	1	20	RECP RM 313	14
15	RECP RM 316	20	1	1	20	RECP RM 301	16
17	RECP RM 316	20	1	1	20	RECP RM 301	18
19	RECP RM 316	20	1	1	20	RECP RM 301	20
21	RECP RM 306	20	1	1	20	SPARE	22
23	RECP RM 308/309	20	1	1	20	RECP RM 301	24
25	RECP RM 301	20	1	1	20	RECP RM 301	26
27	RECP RM 301/307	20	1	1	20	RECP RM 301	28
29	RECP RM 315	20	1	1	20	RECP RM 301	30
31	RECP RM 315 FLR	20	1	1	20	RECP RM 316	32
33	RECP RM 316	20	1	1	20	SPARE	34
35	SPARE	20	1	1	20	RECP QUAD 321	36
37	RECP QUAD 321	20	1	1	20	RECP QUAD 321	38
39	RECP QUAD 321	20	1	1	20	RECP QUAD 321	40
41	RECP QUAD 321	20	1	1	20	RECP QUAD 321	42
43	RECP QUAD 321	20	1	1	20	RECP QUAD 321	44
45	RECP QUAD 321	20	1	1	20	RECP QUAD 321	46
47	RECP QUAD 321	20	1	1	20	RECP QUAD 321	48
49	RECP QUAD 301	20	1	1	20	RECP COPIER 301	50
51	RECP QUAD 301	20	1	1	20	RECP COPIER 307	52
53	-	-	-	1	20	RECP COPIER 301	54
55	-	-	-	-	-	-	56
57	-	-	-	-	-	-	58
59	-	-	-	-	-	-	60
61	-	-	-	-	-	-	62
63	-	-	-	-	-	-	64
65	-	-	-	-	-	-	66
67	-	-	-	-	-	-	68
69	-	-	-	-	-	-	70
71	-	-	-	-	-	-	72
73	-	-	-	-	-	-	74
75	-	-	-	-	-	-	76
77	SPARE	20	1	1	20	SPARE	78
79	SPARE	20	1	1	20	SPARE	80
81	SPARE	20	1	1	20	SPARE	82
83	SPARE	20	1	1	20	SPARE	84

LK - PROVIDE LOCKING TABS ON C.B.; GF - GFI TYPE C.B.; GP - GFP TYPE C.B.;
AF - ARC FAULT TYPE C.B.; ST - SHUNT TRIP C.B.

NOTES:

PPW7 PANEL SCHEDULE

MAIN RATING: 225A MAIN C.B.: MLO KAIC RATING: 22KAIC

VOLTAGE: 208Y/120V PHASE: 3 WIRE: 4 MOUNTING: SURFACE

CIRC. NO.	LOAD DESCRIPTION	BKR. AMPS	NO. OF POLES	NO. OF POLES	BKR. AMPS	LOAD DESCRIPTION	CIRC. NO.
1							2
3	RTU-2 ERV ROOF	20	3	3	20	RTU-3 ERV ROOF	4
5							6
7	TX-1 ROOF	25	1	1	15	TX-2 ROOF	8
9	ACC-A ROOF & AC-A	20	2	1	20	RECP WP/GFI ROOF	10
11				1	20	RECP WP/GFI ROOF	12
13	VAV-1-1 THRU VAV-1-4	20	1	1	20	VAV-1-1 REHEAT COIL	14
15	VAV-1-2 REHEAT COIL	30	2	1	25	VAV-1-4 REHEAT COIL	16
17				1	20	VAV-2-1 THRU VAV-2-5	18
19	VAV-4-1 THRU VAV-4-7	25	1	1	20	VAV-2-6 THRU VAV-2-9	20
21	VAV-4-6 REHEAT COIL	25	2	2	25	VAV-4-7 REHEAT COIL	22
23							24
25	RECP QUAD 316	20	1	1	20	RECP QUAD 316	26
27	RECP QUAD 316	20	1	1	20	RECP QUAD 316	28
29	SPARE	20	1	1	20	RECP 316	30
31	SPARE	20	1	1	20	RECP 316	32
33	SPARE	20	1	1	20	RECP 316	34
35	SPARE	20	1	1	20	RECP 316	36
37	SPARE	20	1				38
39	SPARE	20	1	3	15	CUH-A 300	40
41	SPARE	20	1				42
43	SPARE	20	1				44
45	ADA AUTO DOOR OPENERS	20	1	3	15	CUH-A 300	46
47	-	-	-				48
49	-	-	-	-	-	-	50
51	-	-	-	-	-	-	52
53	-	-	-	-	-	-	54
55	-	-	-	-	-	-	56
57	-	-	-	-	-	-	58
59	-	-	-	-	-	-	60
61	-	-	-	-	-	-	62
63	-	-	-	-	-	-	64
65	-	-	-	-	-	-	66
67	-	-	-	-	-	-	68
69	-	-	-	-	-	-	70
71	-	-	-	-	-	-	72
73	-	-	-	-	-	-	74
75	-	-	-	-	-	-	76
77	SPARE	20	1	1	20	SPARE	78
79	SPARE	20	1	1	20	SPARE	80
81	SPARE	20	1	1	20	SPARE	82
83	SPARE	20	1	1	20	SPARE	84

LK - PROVIDE LOCKING TABS ON C.B.; GF - GFI TYPE C.B.; GP - GFP TYPE C.B.;
AF - ARC FAULT TYPE C.B.; ST - SHUNT TRIP C.B.

NOTES:

OLA Consulting Engineers
50 Broadway,
Hawthorne, NY 10532
914.747.2800

8 West 38th Street,
Suite 501
New York, NY 10018
646.849.4110

olace.com

CLIENT

MARX REALTY
8000 MALL WALK
YONKERS, NY 10704

No.	ISSUE OR REVISION	DATE
5	ISSUED FOR CONSTRUCTION	03/16/22
4	REVISED BID DRAWINGS	01/21/22
3	ISSUED FOR BID	12/13/21
2	ISSUED FOR PERMIT	11/11/21
1	ISSUED FOR REVIEW - 50% DWG SET	09/24/21

No use, reproduction or dissemination may be made of this drawing and the concepts set forth without the prior written consent of OLA Consulting Engineers, PC. Copyright © 2022

PROJECT TITLE

WESTCHESTER COMMUNITY COLLEGE
BUILDING 11 THIRD FLOOR
CROSS COUNTY SHOPPING CENTER
YONKERS, NY

DRAWING TITLE

ELECTRICAL SCHEDULES

SEAL

SCALE: AS NOTED
PROJECT NO.: NTMC0053.00
DRAWN BY: CT
DRAWING NO.: E-603
CHECKED BY: DS
DATE: 09/24/21

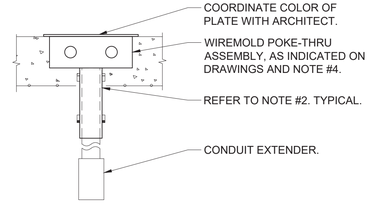

NOTES:
1. FIRE STOP SLEEVE ON UPPER AND UNDERSIDE OF FLOOR SLAB WITH 3 HOUR RATED FIRE STOP AS MANUFACTURED BY SPECIFIED TECHNOLOGIES INC. (STI) SPEC SEAL SSS INTUMESCENT SEALANT OR APPROVED EQUAL.
2. POKE-THRUS SHALL BE MIN. 2'-0" APART FROM EACH OTHER TO MAINTAIN FIRE RATING OF FLOOR.
3. INSTALLATION SHALL BE IN ACCORDANCE WITH MANUFACTURER'S INSTRUCTIONS.

4.) POKE THRU MODEL NUMBERS:
A. POKE THRU WITH (1) DUPLEX 20A RECEPTACLE AND (2) CATEGORY 6 INSERTS WIREMOLD MODEL # RC3ATC OR APPROVED EQUAL.

9 POKE-THRU DEVICE INSTALLATION DETAIL
SCALE: NONE

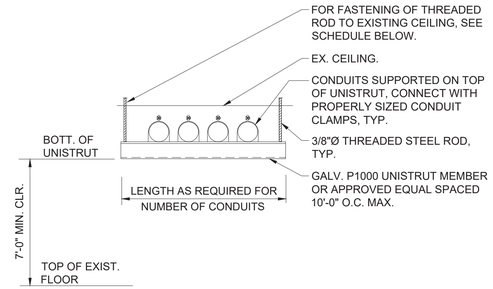

CEILING CONSTRUCTION	ANCHOR TYPE	EMBEDMENT
NORMAL WT. CONC	HILTI HDI DROP-IN ANCHOR	1" MIN.
CINDER CONCRETE	HILTI KWIK BOLT II	3" MIN.
HOLLOW CONSTRUCTION	TOGGLE BOLTS	NA

6 TRAPESE SUPPORT DETAIL
SCALE: NONE

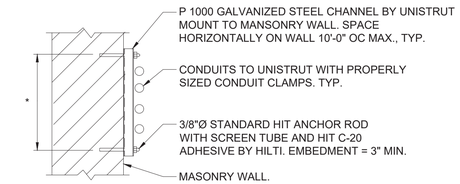

* LENGTH AS REQUIRED FOR NUMBER OF CONDUITS

3 TYPICAL CONDUIT SUPPORT ON MASONRY DETAIL
SCALE: NONE

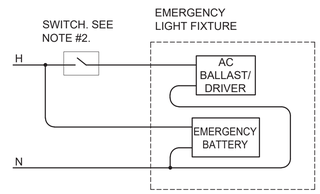

NOTES:
1. THE CONNECTION TO THE LAMPS IS NOT SHOWN - FOLLOW MANUFACTURER WIRING DIAGRAMS.
2. "SWITCH" REPRESENTS A SINGLE POLE SWITCH, A SET OF CONTACTS, A COMBINATION OF 3 WAY AND 4 WAY SWITCHES, ETC. SEE DRAWINGS FOR ACTUAL SWITCH CONFIGURATION.

8 SWITCHED EMERGENCY FIXTURE WIRING DIAGRAM
SCALE: NONE

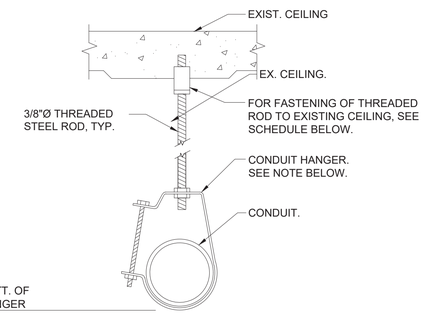

CEILING CONSTRUCTION	ANCHOR TYPE	EMBEDMENT
NORMAL WT. CONC	HILTI HDI DROP-IN ANCHOR	1" MIN.
CINDER CONCRETE	HILTI KWIK BOLT II	3" MIN.
HOLLOW CONSTRUCTION	TOGGLE BOLTS	NA

NOTE: CLEVIS HANGERS REQUIRED ON PIPING LARGER THAN 1". GENERAL PURPOSE HANGERS MAY BE USED ON PIPING 1" OR SMALLER.

5 SINGLE CONDUIT HANGER DETAIL
SCALE: NONE

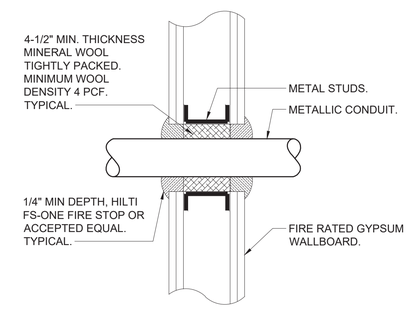

2 TYPICAL FIRE RATED GYPSUM WALL CONDUIT PENETRATION DETAIL
SCALE: NONE

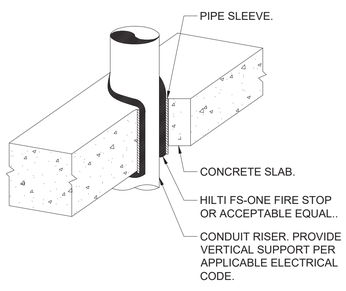

10 TYPICAL VERTICAL CONDUIT PENETRATION DETAIL
SCALE: NONE

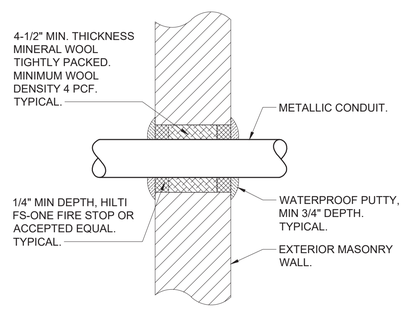

7 TYPICAL EXTERIOR MASONRY WALL ABOVE GRADE CONDUIT PENETRATION DETAIL
SCALE: NONE

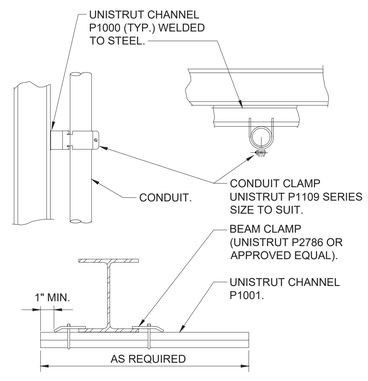

4 CONDUIT SUPPORTED FROM STRUCTURAL STEEL DETAIL
SCALE: NONE

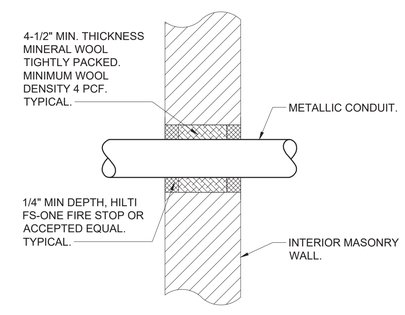

1 TYPICAL INTERIOR MASONRY WALL CONDUIT PENETRATION DETAIL
SCALE: NONE

OLA Consulting Engineers
50 Broadway,
Hawthorne, NY 10532
914.747.2800
8 West 38th Street,
Suite 501
New York, NY 10018
646.849.4110
olace.com

CLIENT

MARX REALTY
8000 MALL WALK
YONKERS, NY 10704

No.	ISSUE OR REVISION	DATE
5	ISSUED FOR CONSTRUCTION	03/16/22
4	REVISED BID DRAWINGS	01/21/22
3	ISSUED FOR BID	12/13/21
2	ISSUED FOR PERMIT	11/11/21
1	ISSUED FOR REVIEW - 50% DWG SET	09/24/21

No use, reproduction or dissemination may be made of this drawing and the concepts set forth without the prior written consent of OLA Consulting Engineers, PC. Copyright © 2022

PROJECT TITLE

WESTCHESTER COMMUNITY COLLEGE
BUILDING 11 THIRD FLOOR
CROSS COUNTY SHOPPING CENTER
YONKERS, NY

DRAWING TITLE

ELECTRICAL DETAILS

SEAL	SCALE	PROJECT NO.
	AS NOTED	NTMC0053.00
	DRAWN BY: CT	DRAWING NO.
	CHECKED BY: DS	E-701
	DATE: 09/24/21	

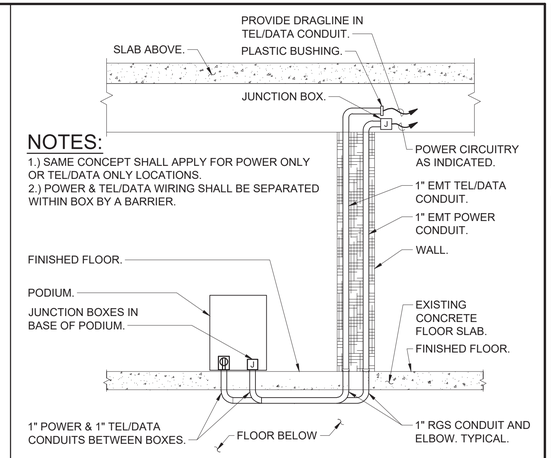

NOTES:

1.) SAME CONCEPT SHALL APPLY FOR POWER ONLY OR TEL/DATA ONLY LOCATIONS.
2.) POWER & TEL/DATA WIRING SHALL BE SEPARATED WITHIN BOX BY A BARRIER.

PODIUM CONDUIT AND CONNECTION DETAIL

3 SCALE: NONE

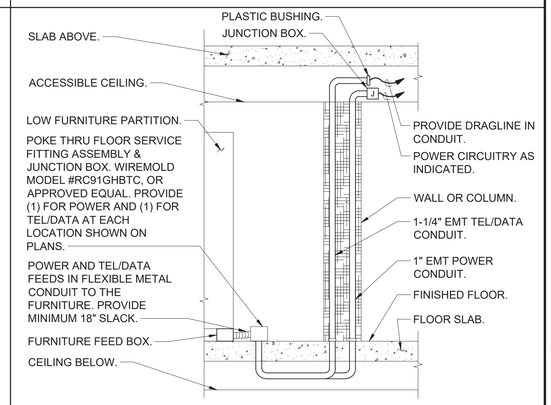

NOTES:

1. FIRE STOP ALL FLOOR PENETRATIONS WITH 3 HOUR RATED FIRE STOP AS MANUFACTURED BY SPECIFIED TECHNOLOGIES INC. (STI) SPEC SEAL SSS INTUMESCENT SEALANT, OR APPROVED EQUAL.

CONNECTION TO FURNITURE BASE FLOOR POKE-THRU

2 SCALE: NONE

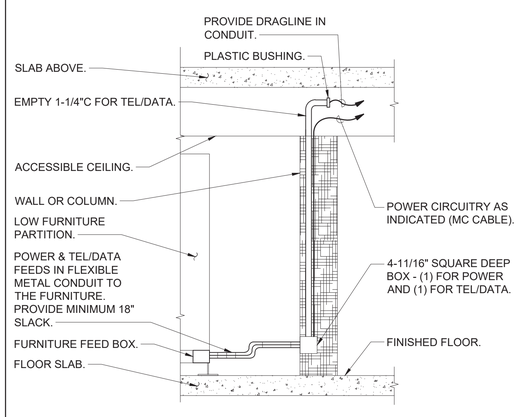

CONNECTION TO FURNITURE BASE WALL JUNCTION BOX

1 SCALE: NONE

OLA Consulting Engineers
50 Broadway,
Hawthorne, NY 10532
914.747.2800

8 West 38th Street,
Suite 501
New York, NY 10018
646.849.4110

olace.com

CLIENT

MARX REALTY
8000 MALL WALK
YONKERS, NY 10704

No.	ISSUE OR REVISION	DATE
5	ISSUED FOR CONSTRUCTION	03/16/22
4	REVISED BID DRAWINGS	01/21/22
3	ISSUED FOR BID	12/13/21
2	ISSUED FOR PERMIT	11/11/21
1	ISSUED FOR REVIEW - 50% DWG SET	09/24/21

No use, reproduction or dissemination may be made of this drawing and the concepts set forth without the prior written consent of OLA Consulting Engineers, PC. Copyright © 2022

PROJECT TITLE

WESTCHESTER COMMUNITY COLLEGE
BUILDING 11 THIRD FLOOR
CROSS COUNTY SHOPPING CENTER
YONKERS, NY

DRAWING TITLE

ELECTRICAL DETAILS

SEAL

SCALE	PROJECT NO.
AS NOTED	NTMC0053.00
DRAWN BY: CT	DRAWING NO.
CHECKED BY: DS	E-702
DATE: 09/24/21	